LUDLOW

1-205-237-5541

For sales or service: ~~1-800/621-6024~~

Ludlow Typecaster — **Photo Polymer Platemaker**

Elrod Stripcaster — **Lettering Machines**

Ludlow Matrices & Sticks — **Graphic Arts Accessories**

Keylink **Electronic Keyboard Type Processor**

LUDLOW TYPOGRAPH COMPANY Division of Ludlow Industries, Inc.
9601 West Balmoral Rosemont, IL 60018 312/671-6230

102 L St.
Anniston AL 36201
Tom

MODEL M Ludlow

Serial # M 16615

MANUAL OF INSTRUCTIONS AND PARTS LIST

1-800-621-6024

KEVIN

MODEL M LUDLOW

installation
maintenance
adjustments
illustrations
and parts list

District Sales Offices:

NEW YORK 589 Fifth Avenue
BOSTON 200 Summer Street
ATLANTA 120 Marietta Street
SAN FRANCISCO 760 Market Street

LUDLOW TYPOGRAPH COMPANY
~~2032 Clybourn Avenue~~, Chicago, Illinois 60614
5976 North Northwest Hwy
60631

Cable Address
LUDTYPE, CHICAGO

Accessories, Tools

Part No.

M179½B	Open E
M180½A	Open E
AM254	Soluble
A504	Mouthp
900	Offset S
A932A	Electric
A939B	Mouthp
A939½B	Crucib
943	Mouthp
A945A	Ludlow
	Ludlow
A946A	"Lubri

Installation of the Model M Ludlow

THE Model M Ludlow machine should be placed at the front and center of a space approximately 5′ x 7′. This will allow ample room for the machine and the water cooler as well as working space at the sides and at the back of the machine for cleaning, oiling and adjusting. The operator works in front of the machine, where additional space must be allowed for efficient operation.

Electrical Connections

For electric-heated machines, the power wires are connected to the control panel located on the back of the machine. A No. 10 gauge main power supply wire is recommended.

Gas Connections

For gas-heated machines, a ½ inch pipe is used. This should be connected to a supply line of sufficient capacity to prevent pressure fluctuations.

Proper Seating and Leveling of the Model M Ludlow

The Ludlow should be placed on a metal plate, preferably on the Ludlow Metal Floor Pan, part No. 27, which is supplied as an accessory. In placing the Ludlow in position it is very important that the legs are "even" and do not create a twist in the frame, which could cause a bind in the main slide as well as lock-up problems.

To properly seat the Model M Ludlow machine:

1. Lift table top to full open position.
2. Apply pressure on a corner of the table and note which leg is not seating firmly on the floor pan.
3. Insert metal shims under one foot opposite the motor side of the machine until the weight is evenly distributed on all four feet.

An alternate method of seating the machine is:

1. Raise the left leg of the machine ⅛ inch off the floor by means of a jack or block and wedge placed under the cross member of the left leg.
2. Place a piece of paper beneath each foot of the left leg.
3. Lower the machine until one of the papers is lightly gripped by one foot. Then place shims of leads or slugs under the opposite foot. Do not force shimming material in place.
4. Remove the jack or block and wedge.

To properly level the machine from front to back:

1. Return table top to normal position and place a spirit level on the table top from front to back.
2. An equal amount of metal shims should be placed under each of either the front or rear feet of the machine until the table top is approximately level from front to back.

The back of the machine must not be lower than the front. It may be ¼ inch higher.

Assembly

For safety in shipping, certain parts are packed separately and these should be installed on the machine as follows:

1. Place crucible in position, insert hinge pins through swivel bracket and tighten set screws.
2. Install Plunger Connecting Rod, part No. 271-EA. Note: When shipped from the factory, the plunger is "frozen" in proper position in relation to the porthole in the well. When properly installed the plunger connecting rod will be in position so that the Plunger Connecting Yoke Pins, Nos. 275 and 280, can be inserted in place without forcing. Tighten lock nut at the bottom of the plunger connecting rod.
3. Attach control panel to bracket on back of machine and make necessary electrical connections according to wiring diagram.
4. Place the water cooler on the floor at the rear of the machine. Connect the water tubes to the cooler. Attach the tubes to the frame of the machine as shown in the diagram. Connect electric wires to the power connections at the motor so that when the motor of the machine is "on" the cooler will be in operation.
5. Install Mold. Be careful to thoroughly clean mold seat and bottom of mold before fastening in position. Tighten mold screws firmly in position.
6. Fill water cooler at top with approximately two gallons of water. (Distilled water is preferred.) Add between one and two ounces of soluble oil. Bleed air from system as per tag on water cooler. Connect water tubes to mold.
7. Other parts which were removed from the machine to save shipping space, such as the Galley Base, A-906-B, the Locking Lever Handle, No. 547, the Delivery Slide Guard, etc. should then be attached to the machine.
8. Fill the crucible with type metal, molten if possible, to completely cover heating units.
9. Except in the case of some export shipments, the motor is mounted in place with motor lead wires connected. The motor pulley should be placed on the shaft and lined up with large pulley. The set screw in the pulley should bear against the flat surface of the motor shaft and should be firmly tightened. The motor position can be adjusted from front to back of machine to insure proper tension on the belt. The motor armature must rotate in a counter-clockwise direction when facing the motor pulley.
10. While the crucible is heating out, turn large pulley by hand until machine is in casting position. Check the following adjustments:

    Main slide height adjustment
    Table latch adjustment
    Stick locking mechanism adjustment
    Mouthpiece to mold adjustment
    Crucible adjustment
    Crucible swivel adjustment
    Crucible compression adjustment
    Centering of the mouthpiece opening with the mold

Instructions for checking adjustments referred to above are shown in the "Adjustments" section of this manual.

Mouthpiece Wiper · Pla

Part No.

M132	8-32 x ⅜″ lo
643½A	10-30 x ⅞″ l
801	Mouthpiece
801½	Mouthpiece
802	Mouthpiece
802½	Mouthpiece
803	Mouthpiece
803½	Mouthpiece
804	Mouthpiece
A804½	Mouthpiece

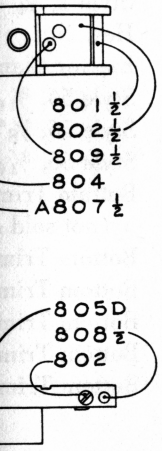

Maintenance

It will be apparent to even the most casual observer that the Ludlow Typograph machine is of rigid construction, has relatively few moving parts, and that the few simple adjustments that may be necessary to maintain its satisfactory operation are easily made.

Oiling

The Ludlow Typograph machine should be thoroughly oiled twice each week, excepting the motor. New motors are oiled and inspected at the factory and, for normal service, should not need additional oil during the first year. Add 40 to 70 drops of a good light oil (SAE-20) or medium (SAE-30) mineral lubricating oil at the end of six months use, if used on a double shift, or at the end of one year if used on a single shift, or after 1,000 hours of service. Over-oiling is as undesirable as under-oiling.

The operator should make a practice of oiling the machine systematically, starting from the same place each time. By going through the same routine, only a few minutes will be required to lubricate the machine thoroughly.

The oiler in the rear of the Crucible Cam Lever, 224ED, should be filled each day with Ludlow Lubriclean Fluid, A945A. Use Lubriclean for all moving parts on the crucible which are subjected to heat, as this is a special preparation which will remain on the heated parts for a longer period of time than will ordinary lubricants.

The Felt Mouthpiece Wiper, 805D, is treated with a special lubricant and should not require any additional oiling.

Ordinary oil is not recommended for the felt wiper, as it will carbonize and fill the mouthpiece air vents and obstruct the opening of the mouthpiece with a deposit which is difficult to remove.

Maintenance Schedule

Every day: Oil crucible Cam Lever, 224ED. Add oil in oilers and oil holes. Oil cams and cam rolls with "squirt" can.

Twice a week: Clean plunger and well.

Once a week: Clean entire machine.

Twice a month: Remove mouthpiece and clean mouthpiece and throat.

Cleaning the Plunger and Well

Free movement of the plunger in the well is dependent upon the thorough cleaning of these parts at least twice each week or oftener. A Plunger and Well Cleaning Kit, A951, is available for this purpose.

When cleaning the plunger and well, cover the mouthpiece

with the Mouthpiece Opening Shield, A504, to prevent the hot metal from splashing out of the mouthpiece when the plunger or well cleaning tool is being inserted into the well.

To clean the plunger, remove it from the crucible, using the combination Holder for the Plunger and Crucible Well Cleaner, A992A. While the plunger is still hot, wipe off the metal and loose deposits adhering to the outer surface and apply a light application of Lubriclean Fluid with the asbestos swab. Allow the fluid to remain on the plunger approximately two to three minutes before brushing off with a wire brush and wiping clean with a cloth. If a hard deposit in the form of a ring is noticed on the upper area of the plunger, it can best be removed with a strip of fine emery cloth.

Immediately after removing the plunger from the crucible for cleaning, place the Crucible Well Cleaner, A992½A, in the molten metal of the crucible (not in the well), to allow the tool to preheat to the temperature of the type metal, so it will be ready for immediate use when the plunger has been cleaned.

To clean the well, skim dross from surface of metal, assemble the preheated well cleaning tool to the holder, A992A. Drop 8 or 10 drops of Lubriclean Fluid in a pool on top of the metal immediately over the well and insert the cleaning tool in the well and work it in an oscillating and up-and-down motion. The oil on the surface of the metal will transfer to the cleaning tool and keep it lubricated. Remove the cleaning tool frequently to wipe off the dross, continuing this operation until the well is cleaned. If the well has not been cleaned regularly, it may be necessary to apply the fluid to the top of the metal two or three times during the cleaning operation.

Before replacing the plunger in the well, skim the dross and Lubriclean residue from the surface of the type metal. Apply a thin coating of Lubriclean to the plunger, and see that it floats freely in the well before assembling it to the plunger lever.

Care should be taken not to drop or bump the plunger or the well cleaning tool against a hard object, as this may mar or upset the surface of these parts, with resultant damage to the well.

If the well cleaning tool becomes ineffective, the four segments can be expanded slightly by careful use of a screw driver or like tool to spring the segments farther apart.

Special patented preparations and tallow should be avoided as a lubricant or cleaner for plunger and well.

Failure to keep the plunger and well clean will invariably result in an unsatisfactory printing face and porous slugs.

Care of Mouthpiece

The grayish-black deposit which accumulates on the vented surface and in the slot of the mouthpiece can easily be removed when hot by the use of Ludlow Lubriclean Fluid. The fluid is applied on the vented surface and in the slot of the mouthpiece and allowed to remain for two to three minutes, when the slot may be scraped clean with the Mouthpiece Slot Scraper, A939B. The three holes in the mouthpiece may be cleaned with a piece of wire $\frac{1}{16}$ inch in diameter. If necessary, the surface may be carefully brushed clean with a wire brush before removing mouthpiece for a thorough cleaning of the throat.

It is advisable to remove the mouthpiece from the crucible at least twice a month to clean the lower part of the mouthpiece and to scrape the side walls of the crucible throat. When cleaning the crucible throat, reduce the metal level by bailing until the top of the well is exposed. To prevent molten metal from entering the screw holes, it is best to replace the mouthpiece screws before scraping the throat of the crucible. With the crucible prepared as above, the Crucible Throat Scraper, A939½B, should be used to scrape the walls of the throat.

After scraping, remove all loose dross from the throat before reassembling the mouthpiece to the crucible. When assembling the mouthpiece to the crucible, the screws should

Ejector and Botto

Part No.	
59	Style 1 thick
171	Style 1
M216	Hex. N
257	Ejecto
326	Style 5
425	Style 5
557	Style 5
620A	Botton (not Botton
621	Botton
622A	Botton
623	Botton Botton

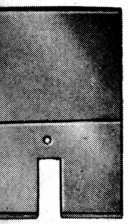

A-639A

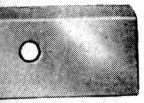

641

57 425

be treated with graphite, to insure their easy removal. No graphite should be put into the screw holes. After the mouthpiece has been assembled to the crucible, cast several blank slugs to thoroughly clean the throat before casting typeface slugs.

Metal Level in the Crucible

Always try to keep metal level approximately ¼ inch to ½ inch below the top at the front of the crucible. If the metal level is permitted to drop below the top of the heating elements, these elements, when heated, can be damaged by their exposure to the air. A low level will also have considerable effect on the solidity of the slug. The metal level may be accurately regulated by the use of an automatic metal feeder.

Care of the Metal

To secure best results, high quality metal should be used in the Ludlow, as in any line-casting machine. Metal which contains improper proportions of lead, tin and antimony, or which is contaminated with copper, zinc, or other foreign substance, will cause considerable trouble. An indication of this trouble will appear in a poor printing face on the slug. In some cases these impurities will form obstructions in the throat and mouthpiece and make it impossible to obtain a satisfactory slug. Any of the leading metal companies will gladly furnish an analysis of the metal from a sample and will advise you of its condition. About a pound of metal will be necessary for proper analysis and this sample may be obtained by casting blank slugs.

It is not intended that any metal other than either standard Ludlow or standard Linotype metal be used in the Ludlow crucible. Standard Ludlow metal contains 6% tin, 11½% antimony, and the balance lead. Standard Linotype metal contains 4% tin, 11½% antimony, and the balance lead. Trouble may be expected when the tin drops below 3¾%, or when the antimony drops below 11¼% or goes over 12%.

Type metal should not contain copper or zinc, and only a trace of arsenic.

Metal Temperature

For standard Linotype metal the temperature of the metal in the crucible under normal conditions should be 565° F. For standard Ludlow metal the crucible temperature may be increased from 5° to 10°. The temperature at the mouthpiece under normal conditions will be 530° with a 6-pt. mold and 500° with a 12-pt. mold. It is important to note that these temperatures are approximate and of necessity must vary depending upon the condition of the metal and other local conditions including line voltage, etc. The temperature must be adjusted to obtain best results in each individual case.

Machine Must Be Kept Clean

The greatest cause of trouble results from failure of the operator to keep his machine clean. As with all hot metal machines, satisfactory operation depends upon perfect contact between matrices, mold and mouthpiece. If particles of metal or other foreign material adhere to the mold, the mouthpiece or the matrices, this perfect contact will not be maintained; or if particles of metal, such as trimmings, etc., become lodged in the cams, trouble will inevitably result.

The foreman in charge of a Ludlow Typograph machine will find that if some one person is made responsible for the maintenance of the machine and is allotted a certain time each day for this work, his effort will be repaid many times by increased production and freedom from repairs and replacements.

The operator should be provided with a stiff bristle brush to remove the particles of metal from the working parts, such as the cams, slides, etc. This should be done frequently. At least once each week the operator should clean the entire machine and remove all accumulations of dust and metal trimmings.

Care of Matrices and Spaces

Ludlow matrices and spaces should be handled carefully at all times. Rough handling will shorten the life of matrices and spaces and cause the slugs to stick to the matrices in the casting operation, due to burrs on the face notch of the matrices. Improper gathering, the "clicking" or "snapping" of matrices on the sides of the stick or against each other, rough handling of the matrices and stick on the table top will shorten the life of the matrices and spaces and cause difficulty. When tightening the matrices in position before casting, the knob on the stick should be tightened only tightly enough to hold the matrices in position but not so tightly that the mold and equalizing bar cannot equalize the height of the matrices before the slug is cast.

Main Slide Parts

Part No.

64	Style 2
216	Style 7
531	Lockin
557½	Botton
	—U
583	Style 4
600	Main
	Main
601	Main
	Main
602A	Main
603	Main
	Main
604A	Main
606	Main
	Main
	Main
	Use
	Main
	Use
609	Main
610A	Main
	Main

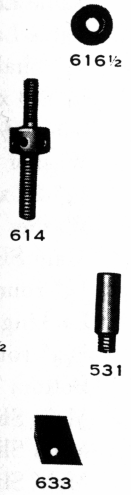

Adjustments

BEFORE the machine leaves the factory, all of its parts have been tested and properly adjusted. However, after the machine has been in use for some time, it may become necessary to readjust some parts. The following instructions should be closely and carefully followed:

Safety Mechanisms

Before making any adjustments, unlatch and raise the table with the hand lever on the left side of the machine. See that the Safety Finger, 753A, is over the end of the Plunger Cam Lever, A258. When the safety finger is in this position the plunger will not operate should the machine be turned on.

The Locking Slide Safety Pawl Bumper, 540C, is so designed that if the end quad on the stick or the division quad does not strike the bumper, the stick cannot be locked in place. The operator should see that this bumper does not become clogged with dirt or metal that might interfere with its operation.

The Locking Slide Safety Pawl, 579B, is so arranged that the stick of matrices must be pushed against the stick stop before the stick can be locked in place to make a cast. This pawl should also be kept clean and free from dirt or metal that might interfere with its operation.

The Safety Operating Lever, 739B, is connected to the locking-down mechanism and operates the Safety Finger, permitting a cast to be made only when the stick is properly locked in position. This is an important safety feature, and care should be taken to see that these parts and parts connected to them, such as 732A, and parts 737B and 735A, and all of their attendant mechanisms are in perfect operating order. Particular attention should be given to Spring, 755, which is located on the under side of the table top, and to Spring, 750½, (inside of tube), attached to the lower part of the mechanism just inside the frame in front of the crucible. These springs keep the safety mechanism in the non-casting position, and the machine should never be allowed to operate without them. Always observe the condition of these springs before making any other adjustments or repairs.

Safety Key

The Safety Key, 155B, which connects the Driving Clutch Gear, 154A, with the Driving Clutch Shaft, 163B, is of such construction that any obstruction to the free turning of the machine will shear the safety key, thus safeguarding against breaking expensive parts of the machine. When this key shears off, replace it with a new one and "back up" the machine in order to locate and correct the cause of the shearing. Quite frequently this shearing will result from insufficient

lubrication, dirt or metal trimmings accumulating in the cams, or by trimmings wedging in between the bottom trim knife slide and the main slide casting. It may also be caused by metal splashing out between the mouthpiece and mold, due probably to improper lock-up or by the failure of the mouthpiece wiper to clean off the mouthpiece properly. After the obstruction is located and removed, operate the machine carefully by hand to be sure that the cause of shearing the safety key has been corrected.

Main Slide Height Adjustment

To test the height of the Main Slide, 600, to which the mold is attached, first remove the right Safety Lever Screw, 730½, and disconnect Safety Connecting Rod, 747B, then remove Table Latch Operating Stud, 77, and then raise the main slide to the highest point of its travel, but do not have the mouthpiece in contact with the mold. Place a blank slug on top of the mold without being locked down, and see that the sides of the blank slug block are two points above the surface of the table top. Any adjustment of this height is made as follows:

Raise the table top, revolve the belt pulley by hand until the main slide has reached the highest point of its travel, but do not have the mouthpiece in contact with the mold. Loosen the Main Slide Adjusting Plate, 612A, located directly under the right hand side of the main slide, by means of Screw, 613A, using Wrench, A623½, furnished with the machine. Using two $\frac{3}{16}$ inch x 4 inch drill rods for wrenches, loosen the two Check Nuts, 615 and 616½, and turn Adjusting Screw, 614, to either raise or lower the main slide. After the proper adjustment is made, carefully tighten the two check nuts and Adjusting Plate Screw, 613A.

Reassemble Safety Mechanism parts.

Stick Locking Mechanism Adjustment

First, recheck back table latch adjustment. Second, fasten two lock-down knobs on the table top to hold it firmly to main frame. Remove the Safety Connecting Rod, 747B. Then operate the machine by hand until the mouthpiece is in approximate casting position under the mold, but is still ¼ inch away from the mold. Lock the blank slug block in position. Loosen Clamp Screw, 18, which is on the side of the Locking Equalizing Bar Clamp, 588A. Back out Adjusting Screw, 563A, until the rollers are free of the locking equalizing bar. Remove Locking Equalizing Lever Adjusting Screw Cap, 593½, and loosen the Check Nut, 230, on the Locking Equalizing Screw, 593, and back the adjusting screw until the Locking Equalizing Bar, A590C, is free of the blank slug block. Then turn this screw, at the same time tapping the top of the equalizing bar with the finger until the equalizing bar makes full contact with the top of the blank slug block. Adjust rollers to bearing contact on the equalizing bar. Tighten all clamp screws after these adjustments have been made.

Stick Stop Adjustment

The stick stop should be so adjusted that when a line is cast the head of the slug is exactly even with the shank of the slug on the end farthest from the operator. This adjustment may be made by loosening the small Set Screw, 713A, in the top of the stick stop slide and turning the Adjusting Screw, 714, in or out until the proper alignment is obtained, after which tighten the set screw. Check this adjustment by casting another line, using the same stick.

Locking Slide Adjustment

When a stick of matrices is placed in the machine and locked in position, it is pushed against the Locking Guide, M575B, by the Locking Slide Shoe, 567, and the spring tension of the two Locking Slide Shoe Springs, 568. These springs sometimes become weakened after long usage and require replacement. If the head of the slug is not parallel to the shank, it may be that these springs do not have sufficient tension to hold the stick of matrices firmly against the lock-

Main Slide · Plate No.

Part No.

59	½"-13 Jam
64	Washer for
73	Table Latch
77	Table Latch
158	¼" Shakep
171	¼"-20 x ⅝
216	8-36 x ¼"
M216	Washer for
241½	¼"-20 x ⅞
257	Washer for
303½	Main Slide
425	⅛" round
531	Locking Re
557	$\frac{3}{16}$" round
557½	Bottom Tri
600	Main Slide
609	Main Slide
610A	Main Slide
611	Main Slide
612A	Main Slide
613A	Main Slide
614	Main Slide
615	Main Slide
615½	⅜" Plain
616	Main Slide

ing guide at the time the cast is made, or that the locking guide itself is out of alignment.

The locking guide is adjustable so that the proper alignment of stick may be maintained at all times. To make this adjustment, the Locking Guide Screws, 576A, should be loosened, which will permit the turning of the Locking Adjusting Screws, 582B. Very little movement of these screws will be necessary to obtain the proper adjustment. Tighten the Screws, 576A, while the stick is locked in position.

If the locking guide has been put out of adjustment to the extent that the Locking Slide Safety Pawl Bumper, 540C, does not operate properly, it will then be necessary to realign the guide from the mold slot. To do this, disconnect the Safety Connecting Rod, 747B. Remove Locking Equalizing Bar, A590C. Loosen the locking guide. Then raise the Main Slide, 600, to the highest point of its travel. Place a blank slug halfway into the mold slot. The distance between the blank slug and the locking guide should be 5¾ picas (.954″) when using a 12-pt. mold, and 6 picas (.996″) when using a 6-pt. mold.

Mouthpiece to Mold Adjustment

Revolve the belt pulley by hand until the mouthpiece is ready to come into contact with the mold. Slip a piece of paper between the mouthpiece and the mold and operate the machine by hand until the mouthpiece is locked up against the under side of the mold; then back up the machine a little until the paper may be removed. The impression on the paper will show whether the mouthpiece is resting solidly and evenly against the mold.

There are two ways in which the mouthpiece may be out of adjustment with relation to its proper seating against the under side of the mold. First, the crucible may be tilted sidewise in such a way that the mouthpiece bears against the mold only along one side, and this condition is referred to in this section. Second, the mouthpiece may bear against the mold more on one end than on the other, the correction for which is explained under "Crucible Adjustment."

At the rear of the machine and located directly under the crucible, is the Crucible Swivel Bracket, 234B, fastened to the frame by two Screws, 236. Make sure the mouthpiece is not touching the bottom of the mold, loosen only one of these screws slightly and then loosen the Check Nut, 59, and turn the Adjusting Screw, 237, which will tilt the crucible in the desired direction. Very little movement of the screw is necessary—perhaps not over one-eighth turn. Make the test with the paper again to be certain that the adjustment is correct. The paper should show an even impression of both sides of the mouthpiece seat. Then tighten Screw, 236, and the Check Nut, 59.

After tightening the screw and nut, test the lock-up again. It may be necessary to adjust the opposite side of the crucible swivel bracket.

Crucible Adjustment

Check stick locking mechanism and rear table latch to be sure they are properly adjusted.

In the upper right-hand corner of the illustration are two kinds of incorrect seating relations between mouthpiece and mold. These may be corrected by either lowering or raising the Crucible Swivel Bracket, 234-B, as follows:

Note: *Do not loosen both screws 236 at same time.*

To remedy "A" condition

Make sure the mouthpiece is not touching the bottom of mold when making the following adjustments.

Loosen screw 236 (left side only facing rear of machine) enough so screw bears slightly on Bracket, 234-B. Loosen Check Nut, 59, and turn screw 237 slightly to the left. Tighten screw 236 and nut 59.

It may be necessary to repeat above on right-hand side until proper seating is accomplished.

To remedy "B" condition

Same as above *except* work first on right side facing rear of machine and turn screw 237 to the right.

Very little movement of these screws will be necessary to correct the seating relations of these parts. To determine just when the mold and mouthpiece are in proper relation, insert a strip of tissue paper between the under side of the mold and the mouthpiece and move crucible to the casting position. The mouthpiece should leave an even impression on the paper, indicating that the mouthpiece is pressing against the mold equally on both ends. Check the Compression Bolt, 213-B, to see that the Castellated Nut, 214-A, is raised 1/32 inch above its seat when in casting position as indicated at "C". Adjust if necessary. Cast a few slugs, preferably 12-pt., using the blank slug block. If the mouthpiece and mold are properly adjusted, the mouthpiece vent marks will show up clearly along bottom of the slug over its entire length. If the mouthpiece and mold are not in proper relation, the vent marks will be only partly visible and the bottom of slug will be shiny, either wholly or in part. While casting test slugs, the mouthpiece should be wiped off carefully between each cast. If one end of the slug bottom is consistently shiny, it indicates that the corresponding end of the mouthpiece should be raised slightly.

Great care must be taken in making this adjustment. It will probably never be necessary to move adjusting screws 237 over one half turn.

Refer to illustration of Crucible Operation Mechanism. See that both Crucible Swivel Bracket Screws, 236, and Check Nuts, 59, are tight.

When adjustments are performed properly, there will be a slight gap between screws 237 and the bracket. The point of the screw will be seated against bracket on left side, and the head of the screw on right side. After these adjustments have been taken care of satisfactorily, turn two Adjusting Screws, 1231½, of Swivel Bracket Lock, 234½, so that they bear against 234-B bracket. Then tighten lock screws 625½ of the adjusting screws.

Crucible Swivel

The Crucible Swivel Nut, 232, should be just tight enough to resist any tendency of the crucible to rock, yet not so tight that it offers resistance to the turning of the Crucible Swivel, 231B. To adjust this nut, with crucible at rest position, remove the Crucible Swivel Nut Pin, 233, and turn this nut, using a metal rod, to the right to tighten, or to the left to loosen, after which replace Pin 233 in one of the two holes in Swivel, 231B, which is nearest in alignment with hole in Nut, 232.

Crucible Compression Adjustment

To maintain the proper lock-up between the mouthpiece and the under side of the mold, the following adjustments must be carefully checked:

With the table top raised, operate the machine by hand until the mouthpiece is pressing firmly against the under side of the mold, which is in its highest position. At this point the Castellated Nut, 214A, should be in such position that it is raised 1/32 inch above its seat, as shown at "C". This insures the proper pressure of the mouthpiece against the under side of the mold. This adjustment may be changed by removing the Cotter Pin, 219, and turning the Castellated Nut, 214A, up or down until the proper location is reached, after which replace the corner pin.

Centering Mouthpiece Opening With Mold

With the table top raised, operate the machine by hand until the mouthpiece has swung into position under, and is in compression with the mold. At this point the mouthpiece orifice should be exactly centered in the mold opening, and if not in the center, adjustment may be made as follows:

Swing up the Crucible Adjusting Bolt Guard, A215A, and loosen the two Clamp Screws, 250, and the two Check Nuts,

Main Shaft, Cams a

Part No.

15A	Oiler
18	¼"-20 x
20	½"-13 x
21	Main Sh
22	No. 6 Ta
22½	No. 6 Ta
23	Main Sh
25	"G" Wo A647)
59	½"-13 x
83A	Table La
83½	Table La
91B	Table La
A91B	Table L [91B] [83A]
100½A	Oil Cup
184B	Main Sh
194A	Main Sh
194½	Main Sh
220A	Crucible
248	10-30 x
254B	Plunger
A258	Plunger (Incl
276½	Panel B
277EB	Panel B
285	⅝" Bol Wash
601	Main Sl (Use
603	Main Sl (Use

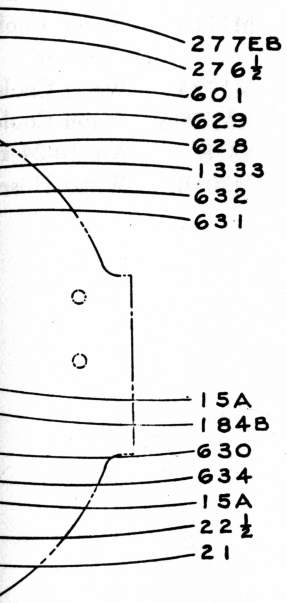

230. Then unscrew one Adjusting Screw, 229½, and screw in the other adjusting screw to give the desired location. For instance, if it is necessary to move the crucible to the left, unscrew the left-hand screw, screw in the right-hand screw the desired amount, after which tighten the left-hand screw until it bears against the Crucible Cam Lever, 224D. Then tighten the Check Nuts, 230, and the Screws, 250, and lower the Guard, A215A.

Plunger Height Adjustment

The plunger should be so adjusted that its bottom edge is 1/16 inch above the lower edge of the port in the well. This adjustment may be checked by removing the Cotter Pin, 68, and Pin, 275. This will permit the plunger to float in the well. A piece of wire 1/16 inch in diameter should be bent into an "L" shape, so that one end may be inserted through the molten metal into the porthole of the well of the crucible. After the wire has been inserted through the porthole, the plunger should be pressed down upon the wire. With the plunger in this position, the hole in the Plunger Connecting Lever, 274A, should line up with the hole in the Connecting Rod, 271A. If these holes are not in alignment, loosen Check Nut, 59, at the bottom of the Connecting Rod, 271A, and turn the connecting rod up or down as required. After adjustment is completed, tighten Check Nut, 59, and replace all parts. Any variation from the correct setting of the plunger will result in hollow slugs, unsatisfactory face, or both.

Plunger Spring Adjustment

At the time of installation the plunger spring pressure should be rechecked. Using the largest point size matrices in the users plant with the plunger hand lever in the bottom position, adjust the tension of the plunger springs so there is a slight sign of oversize on the under side of the T-head of the slug. Then release the plunger springs until the "bulge" disappears. Care should be taken that each plunger spring is rotated an equal amount when this adjustment is made. Because the "lifting action" of the molten metal between the mold and matrices is greater on the larger point sizes, it is possible to use additional plunger spring pressure with the smaller point size typeface matrices as well as with ruleform matrices.

Table Latch Adjustment

The adjustment of the Table Latch, 86B, by means of which the table top is locked to the frame of the machine during the casting operation, should be made when the machine is in its idle position.

The Spring, 755, attached to that part of the table latch which is under the table top, should be removed and the table top should be lowered and locked down with the front Table Catches, A93A and 97. That part of the adjustable lock which projects through the top of the table may then be grasped and moved back and forth. If it moves very freely, the pawl should be raised, after loosening screws, and the notched eccentric bushing moved to the left by turning the knob one notch at a time until the latch binds slightly when it is moved back and forth. The pawl should then be dropped into position and the screw which holds it in place tightened and the spring underneath the table replaced. If it is not possible to get the proper adjustment through the turning of the eccentric bushing, further adjustment may be made by raising or lowering that part of the Latch, 91B, which is attached to the main frame. To make this adjustment, the check nut should be loosened, which will allow the screw to be turned, thus raising or lowering Latch, 91B. The check nut should then be locked and the final close adjustment made with the eccentric bushing, as stated above.

During the casting part of the cycle, the automatic lock is in operation, locking the table down to the main frame of the machine. This latch is actuated by a Screw Stud, 77, which is fastened to the main slide by a bracket held in place with two

screws. When the slide rises, this stud striking the diagonal side of the latch pushes it into position underneath the pin in the Latch, 91B. This stud is purposely made so that it will break in case there is some obstruction to the operation of the latch, protecting the more delicate parts of the locking mechanism. In the event the stud breaks off, the cause should be located and corrected and the stud replaced. Operate machine slowly by hand to see if the latch functions properly before turning on the motor.

When Machine Stalls in Casting Position

In the event the machine should stall due to a hot metal flash just as the cast is being made, or has just been made, it will be necessary to raise the Table, No. 48, to investigate and correct the trouble, but before attempting to raise the table, *the following procedure is imperative:*

1. "Throw" the motor switch to the "off" position.
2. Remove Plunger Connecting Lever Pin, 275.
3. Remove the Safety Lever Screw, 730½, which connects the Safety Connecting Rod, 747B. These parts are located on top of the table.
4. This should permit the plunger cam lever to be depresed enough so that the Safety Finger, 753A, may be positioned over the top of the projecting end of the plunger cam lever. *It is most important that the safety finger be positioned over the cam lever before any attempt is made to raise the table.*
5. Release the Rear Table Latch, 86B, by removing the threaded Table Latch Yoke Pin, 83A. The removal of this threaded pin is accomplished by inserting a long screw driver through the ½ inch hole located on the rear side of the table near the center, and unscrewing the threaded pin, thereby releasing Table Latch, 86B.
6. Release the front Table Catches, A93A and 97. The table may now be raised for observation of the location of the metal flashings.
7. Remove all metal flashings from the movable parts as well as the interior of the machine generally.
8. Add new Safety Key, 155B.
9. Replace Plunger Connecting Lever Pin, 275.
10. Reassemble all parts which have been removed.
11. Operate the machine manually until the cam shaft returns to the neutral or idling position.

Ejector Blade

If the Ejector Blade, A639A, is removed for any reason, clean the shoulder upon which its rests very thoroughly before it is replaced, as any dirt or metal on this shoulder will tip the ejector and cause a drag on the ribs of the slug. The top surface of the ejector must be parallel with the mold.

Delivery Slide

To adjust the Slug Holders, A663H and A664H, remove the slide from the machine by removing the Mouthpiece Wiper Bracket, A806K, which also retains the left side of the slide, and the Slug Carrier Operating Rack, A695A, which retains the right side of the slide. Turn the slide bottom side up, first making sure the Slug Holder Operating Plates, 645B, are not bent, then take two pieces of straight metal, such as 12-pt. slugs, and hold them firmly against the sides of the delivery slide casting so that they depress the Slug Holder Cams, A646A and A646½A. The slug holders should then be in a vertical position. If they are not in this position, loosen the Set Screws, 573, and turn the Adjusting Screws, 636½, until the proper adjustment is obtained, after which tighten the Set Screws, 573.

Adjust the two Screws, 669, in the Slug Holder Bearing Plate, 671G, so that the distance between slug holders, when closed, is approximately 13 points. Also, the two shoulders on the slug holders, on which the slug rests, should be of the same height and on the center line of the opening in the delivery slide. Place the slide back in the machine. Replace parts A806K and A695A.

Mold Cooling Syst

Part No.

M126B	Water
M132	No. 8-3
M171A	Water Slee
M172A	Water
AM190A	Water
231E	No. 10
M303B	Water

Metal Mold Wiper

After the machine has been in service for some time, the lower edge of the Metal Mold Wiper, 676D, may become rounded off to such an extent that the mold will not be wiped clean. To replace mold wiper, turn it one-quarter turn and remove it from under the head of the stud. Place new wiper under the head of the stud and turn until wiper snaps into place.

To adjust the Mold Wiper Arm, A678½B, operate the machine by hand until the mold has reached the highest point of its travel, at which point it should be possible to raise the mold wiper arm about two points. If this adjustment is not correct, loosen Check Nut, 230, located under mold wiper arm near its fulcrum, after which Adjusting Screw, 701, may be turned until the proper adjustment is obtained. Then tighten nut.

To adjust the mold wiper arm rest, operate the machine by hand until the delivery slide has reached the farthest point of its travel toward the rear of the machine and has started back to the front of the machine for a distance of 1 or 2 inches.

Loosen Check Nut, 230. Place a short piece of 2-pt. lead between Adjusting Screw, 696½, and Mold Wiper Arm, A678½B, and adjust the screw so it just bears against the 2-pt. lead. Then tighten the Check Nut, 230.

To adjust the Mold Wiper Arm Cam, 691½A, proceed as follows:

Operate the machine by hand until the delivery slide has reached the farthest point of its travel toward the rear of the machine, at which point Cam, 691½A, should have just been tripped by contact of the Screw, 980A, against the lug on the Mouthpiece Wiper Bracket, A806K. Any necessary adjustment may be made by loosening Nut, 325, and turning Adjustment Screw, 980A, until the proper adjustment is obtained. Operate the machine slowly by hand before applying the power.

Gas-Heated Crucible

To obtain best results with a gas-heated crucible, be sure that the supply line is large enough so there will be no drop in gas pressure if the burners are turned on suddenly to their maximum capacity. Wherever possible, the Ludlow crucible should be connected to a supply line that has a pressure regulator.

There are two burners in the gas crucible: a Mouthpiece Burner (which is located under the throat and mouthpiece) and the Main or Base Burner directly under the crucible.

The gas thermostat on the Ludlow crucible should, when it is properly set, maintain the temperature of the metal in the crucible from 550° to 565° F.

In some localities, the quality of the gas is such that after burners have been in use for some time they may become clogged. If air pressure is available near the machine, it is a good plan to blow out the burners and mixing valves every few weeks. Bellows may also be used for this purpose.

Do not place the machine in such a position that it will be subjected to severe drafts of air, as this will cause sudden variation of temperature in the crucible, due to the blowing of the flames.

Electric-Heated Crucible

The Ludlow Electric Crucible is so constructed and wired that the terminals, switches, circuit breakers, etc. are readily accessible.

All terminals and wires are plainly marked and correspond to the markings as shown in the wiring diagram.

The main feed wires enter the bottom of the control panel and are connected to the terminals as shown.

From the main hand switch, the wiring is divided into four circuits, as follows:

Crucible Heater Circuit
Thermostat Circuit

Throat and Mouth Heater Circuit
Motor Circuit

These circuits are illustrated in separate colors on the wiring diagram for convenient tracing.

Machine Must be Grounded

All tests are based on the supposition that the machine is grounded. In most cases the machine is grounded by the line wire conduit. In case an adequate ground is not so established, it will be necessary to connect a No. 10 wire between the frame of the machine and a water pipe, or some other safe means of transmission to the ground.

Test Lamp

A Test Lamp, A932A, may be used for locating most electrical trouble in the crucible.

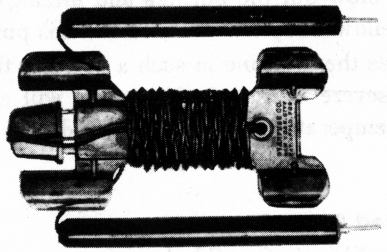

Test Lamp, A932A

How to Use Test Lamp

The test lamp may be used to locate a "ground," an "open circuit," or a "dead" heating element. An explanation of terms follows:

Open Circuit

An incomplete circuit, one broken at any point, so that current does not flow through any part of it. A broken wire or loose connection can cause an open circuit.

Dead Heater

A heater that has an open circuit.

Ground

An electrical connection between an electrical circuit and the crucible or frame of the machine.

Short Circuit

A connection between the two sides of a circuit so that the current takes a shorter path than is intended.

Preliminary Tracing of Electrical Trouble

All circuits are protected by circuit breakers. In case of ground or short, circuit breaker goes automatically to "off" position. When trouble is corrected, switch circuit breaker to "on" position. Other indications of electrical trouble will be variations of temperature of the type metal in the crucible or at the mouthpiece, or stopping of machine. Variations of temperature have to do with the crucible, throat or mouthpiece heaters or circuits. Stopping of the motor is confined to the motor circuit.

Control Panel Test

With test lamp short-circuited, place test points on power terminals. If the current reaches these terminals, the lamp will light. If the lamp does not light, test the main cut-out fuses.

Open Circuit Test

Turn on the panel hand switch and, with test lamp short-circuited, make the same test on terminals of each circuit. This test should light the lamp.

If the above tests fail to light the lamp, the failure may be due to a broken wire, loose connection, a defective hand switch or a faulty unit, which must be corrected.

Plate No. 11

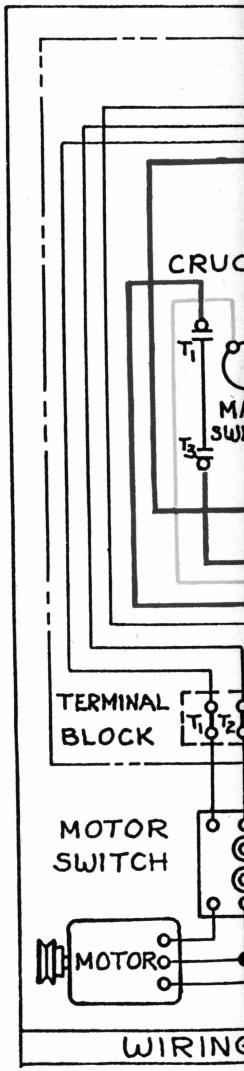

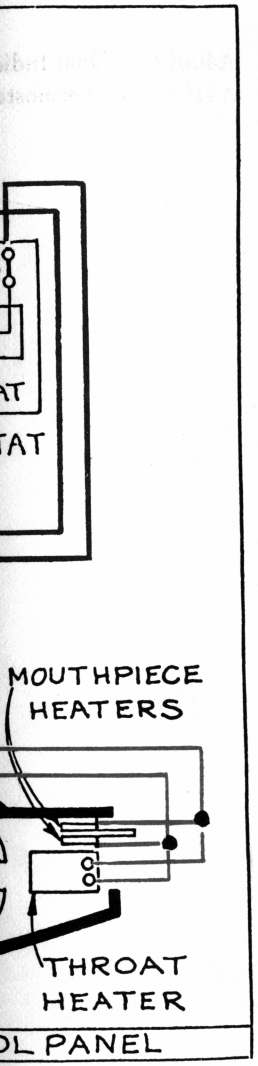

Ground Test

With the panel switch turned off, remove the lead wires from all terminals and with the test lamp connected to a lighting circuit touch each of the terminals in the control panel with the live point of the test lamp. If a light shows, it indicates a ground which must be corrected.

Short Circuit Test

If the metal in the crucible fails to melt out, or if the mouthpiece freezes and there is no indication of either an open circuit or a ground, check the circuit breakers. If in "on" position, turn to "off" position and check the wires as well as each of the heating units for a short circuit. The test lamp described above cannot be used successfully for all short circuit tests. An ordinary light bulb test should be made on the terminals of the heating units. A dim light indicates there is no short circuit. A bright light indicates a short circuit.

Motor Circuit Test

If the motor fails to start, slows down, stops, or overheats, it is an indication of trouble in the motor or motor circuit. Before making any tests, remove the belt and see if the trouble persists. If motor runs satisfactorily with the belt removed, then look for mechanical trouble in the machine. If motor fails to operate with belt removed, check motor circuit as outlined above.

Crucible Thermostat Adjustment

Insert hot metal thermometer near the mercury bulb in the crucible metal and allow sufficient time for the thermometer reading to reach the temperature of the metal. Open back of thermostat. Loosen set screw and turn "stem" with wrench supplied with thermostat until the indicating hand corresponds with the temperature shown by the thermometer and then tighten the set screw.

Mouthpiece Thermostat Adjustment

To calibrate the mouthpiece thermostat:

Set crucible temperature 550°.

Turn off current for the mouthpiece and throat units at circuit breaker.

Heat from the crucible will also heat the throat and mouthpiece. Allow 30 minutes for heat to equalize. There will be some heat lost, so that when the temperature of the metal in the crucible is 550° the temperature at the bulb of the mouthpiece thermostat will be approximately 450°.

If the mouthpiece thermostat does not read 450°, then loosen set screw and turn stem until the indicating hand is at 450° and tighten set screw. Turn on current at circuit breaker.

This method of calibrating the mouthpiece thermostat will result in metal temperatures within 10° plus or minus. A more accurate adjustment is possible by using a surface thermometer at the mouthpiece, although this is not regarded as essential, since the heat at the mouthpiece and throat of crucible will depend upon local conditions.

Plate No. 1

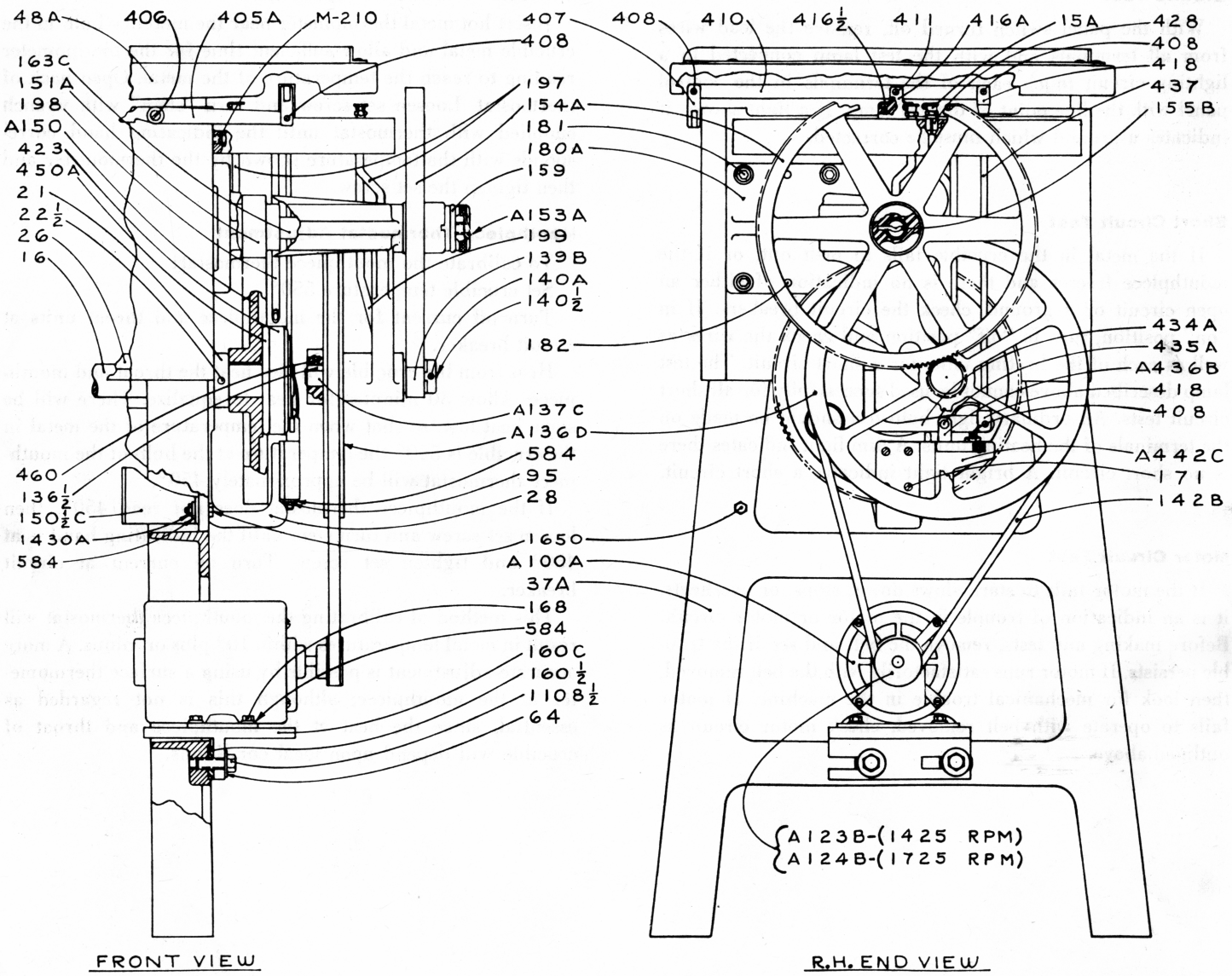

MACHINE DRIVE PARTS

Dual Indicating The

Part No.

A400EB Dual Ind
A410½EA Thermost

Part No.	Description
15A	Oiler
A16	Main Shaft Assembly (Sold only as an assembly —includes 22½)
21	Main Shaft Collar—Right
22½	No. 6 Taper Pin—2½" long
26	Main Shaft Bearing—Right
28	Main Shaft Bearing Cap—Right
37A	Leg (Right)
A48A	Table Assembly (Sold only as an assembly)
64	½" bolt size 1¼" OD x 3/32" thick Washer
95	5/16"-18 Hexagon Nut
A100A	Motor—¼ hp (Specify rpm, voltage, cycles and phase)
118A	Motor Shim—for 1425 rpm motor only (not illustrated)
A123B	Motor Pulley and screw—½" bore— for 1425 rpm motor
A124B	Motor Pulley and screw—½" bore— for 1725 rpm motor
A136D	Pulley
136½	Pulley Key
A137C	Pulley Shaft Assembly (includes 139B, 140A and 140½)
139B	Pulley Pinion (sold only in A137C)
140A	3/16" dia. x 1½" long Roll Pin
140½	Pulley Pinion Hub
142B	Main Drive Belt
A150	Main Shaft Driving Gear Assembly (Includes 450A, 451 and 452½)
150½C	Motor Wiring Unilet Bracket
151A	Driving Gear Pinion
A153A	Driving Clutch Gear Safety Knob Screws
153½A	Driving Clutch Gear Safety Knob Screws
154A	Driving Clutch Gear
155B	Driving Clutch Gear Safety Key

Part No.	Description
159	Driving Clutch Gear Hub
160C	Motor Base
160½	Motor Base Washer
163C	Driving Clutch Shaft
168	5/16"-18 x ½" long Hexagon Head Cap Screw
171	¼"-20 x 5/8" long Flat Fillister Head Screw
180A	Drive Shaft Bracket
181	7/16"-14 x 1½" long Hexagon Socket Cap Screw
182	5/16" dia. x 1¼" long Hardened Dowel Pin
197	Clutch Shaft Oil Tube
198	Clutch Body Oil Tube
199	Pulley Shaft Oil Tube
M210	5/16"-18 x ¾" long Hexagon Head Cap Screw
405A	Tripping Lever
406	Tripping Lever Stud
407	Tripping Lever Connection
408	Tripping Lever Connection Stud
410	Tripping Lever Intermediate
416A	Tripping Lever Intermediate Bracket
416½	No. 10-32 x 1" long Hexagon Socket Cap Screw
418	Tripping Lever Clevis
423	Clutch Body
428	Clutch Body Oil Tube Bushing
434A	Clutch Release
435A	Clutch Release Fulcrum
A436B	Clutch Release Yoke Assembly
437	Clutch Release Connection
A442C	Clutch Release Bracket Assembly
450A	Clutch Disc
460	5/16"-18 x 1⅛" long Cup Point Hexagon Socket Self Locking Set Screw
584	5/16" Bolt Size x 11/16" OD x 1/16" thick washer
1108½	½"-13 x 1½" long Hexagon Head Cap Screw
1430A	¼"-20 Heavy Hexagon Nut
1650	¼"-20 x 1" long Hexagon Head Cap Screw

Plate No. 2

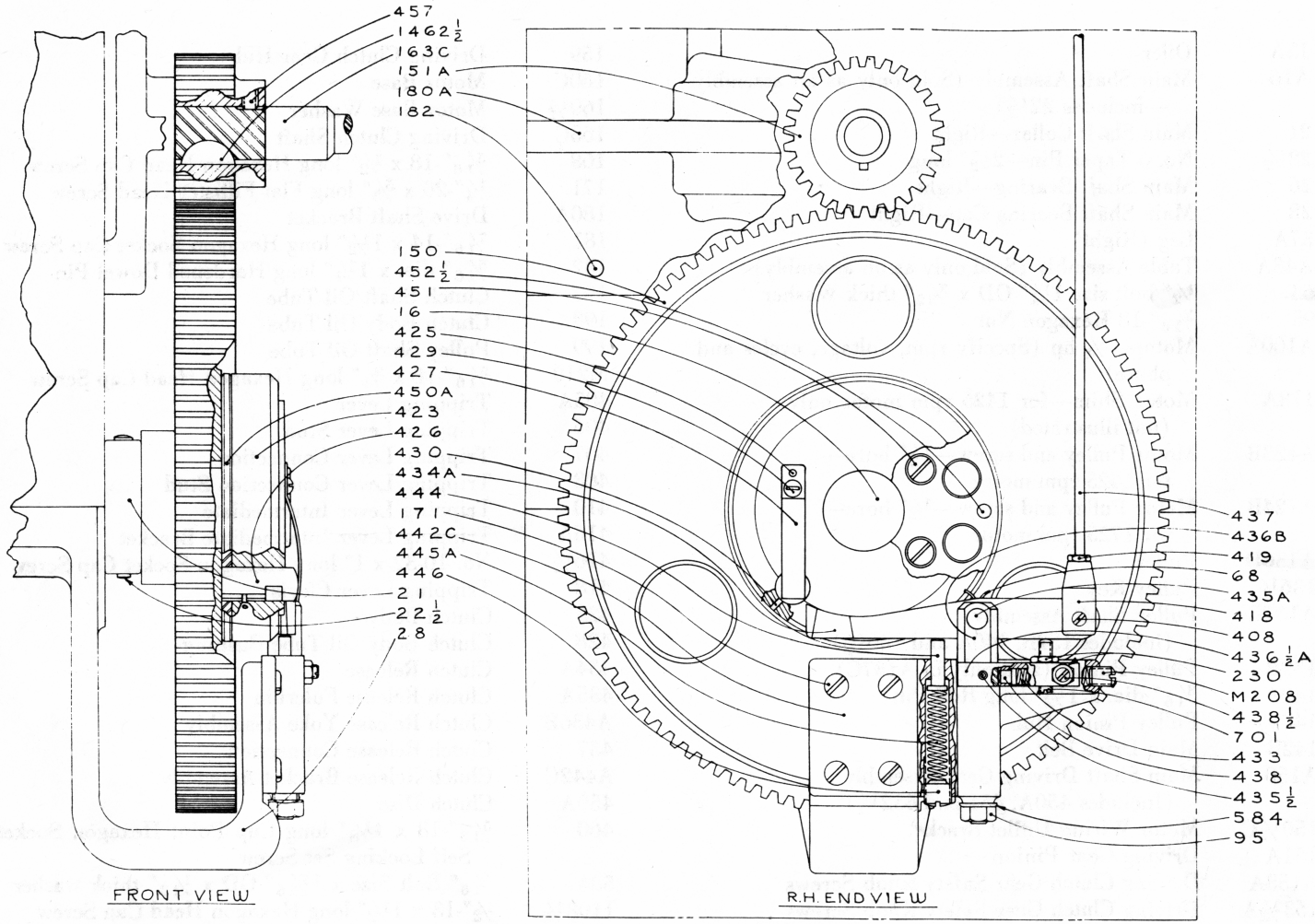

CLUTCH MECHANISM

Electric Crucible Cro

Part No.

68	3/32" dia.
201EA	Bottom Ca
205EB	Electric C
209EB	Electric C
209½	Electric C
210	Crucible C
A211EA	Electric C (Specif
A212EA	Electric C (Specif
213B	Crucible A
216	No. 8-36 x
217A	Crucible S
218A	Crucible S
224ED	Electric C
225A	Crucible C
225½	Crucible C
226D	Crucible C
226½	3/8"-16 Slo
227½	3/8" bolt s
229½	1/4"-20 x Screw
230	1/4"-20 x
239E	Electric C (not so
A247F	Crucible M
250	1/4"-20 x
251A	Plunger (not so
252	5/16" dia. (not so

Clutch Mechanism · Plate No. 2

Part No.	Description
16	Main Shaft (sold only as assembly A-16)
21	Main Shaft Collar—Right
22½	No. 6 Taper Pin—2½" long
28	Main Shaft Bearing Cap—Right
68	3/32" dia. x ¾" long Cotter Pin
95	5/16"-18 Hexagon Nut
150	Driving Gear—Main Shaft
151A	Driving Gear Pinion
163C	Driving Clutch Shaft
171	¼"-20 x ⅝" long Flat Fillister Head Screw
180A	Drive Shaft Bracket
182	5/16" Dia. x 1¼" long Hardened Dowel Pin
M208	⅜"-16 x ½" long Oval Point Slotted Headless Set Screw
230	¼"-20 Standard Jam Nut
408	Tripping Lever Connection Stud
418	Tripping Lever Clevis
419	No. 10-30 x ⅛" thick Jam Nut
423	Clutch Body
425	⅛" dia. x ½" long Dowel Pin
426	Clutch Pin
427	Clutch Pin Spring
429	No. 8-32 x ½" long Round Head Screw with lock washer

Part No.	Description
430	3/32" dia. x 5/16" long Dowel Pin
433	Clutch Release Yoke Spring
434A	Clutch Release
435A	Clutch Release Fulcrum
A436B	Clutch Release Yoke and Extension Assembly
437	Clutch Release Connection
438	Clutch Release Yoke Spring Plunger
438½	¼"-20 x ¾" long Oval Point Slotted Headless Set Screw
442C	Clutch Release Bracket
444	Clutch Release Spring Plunger
445A	Clutch Release Spring
446	½"-13 x ½" long Cup Point Slotted Headless Set Screw
450A	Clutch Disc
451	¼"-20 x ½" long Flat Head Hexagon Socket Cap Screw
452½	¼" dia. x ⅝" long Roll Pin
457	5/16"-24 x ½" long Cup Point Hexagon Socket Headless Set Screw
584	5/16" Bolt Size x 11/16" OD x 1/16" thick Washer
701	¼"-20 x 1" long Oval Point Slotted Headless Set Screw
1462½	No. 13 Woodruff Key

Plate No. 3

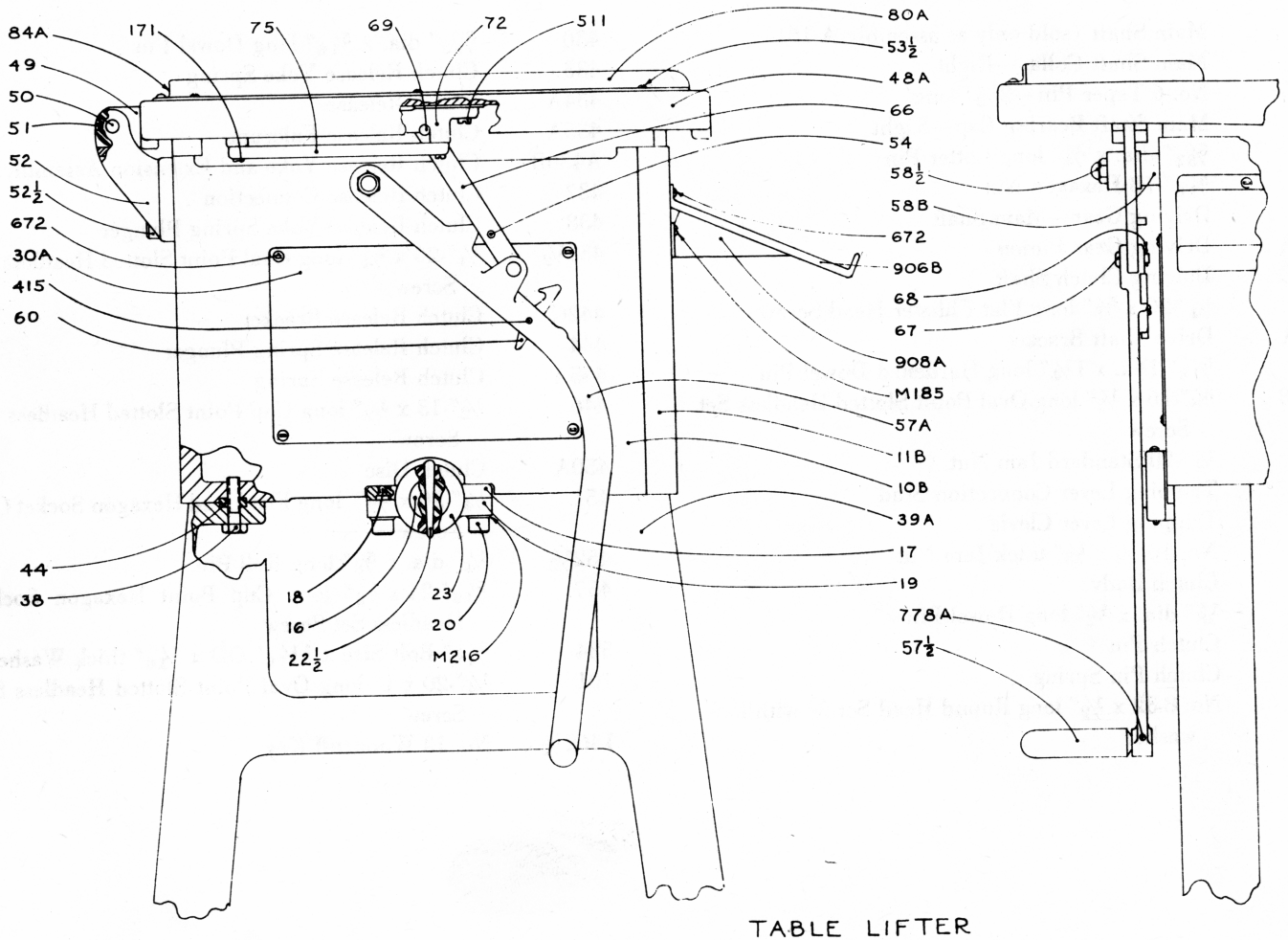

TABLE LIFTER

Crucible Operating Me

Part No.

282	Plunger Con
286	Plunger Can
287	Plunger Can
288	⅜"-16 Hexa
289	Plunger Can
290	Plunger Can
562	5/16"-18 Sta
625½	¼"-20 x ⅝" gon Sock
632	3/32" dia. x
742A	Safety Shaf
744	No. 2 Taper
753A	Safety Fing

Table Lifter · Plate No. 3

Part No.	Description
10B	Main Frame (not sold)
11B	Frame Front Plate
16	Main Shaft (sold only as assembly A-16)
17	Main Shaft Bearing—Left
18	¼"-20 x ⅞" long Flat Fillister Head Screw
19	Main Shaft Bearing Cap—Left
20	½"-13 x 2" long Hexagon Socket Cap Screw
22½	No. 6 Taper Pin—2½" long
23	Main Shaft Collar—Left
30A	Frame Cover
38	½"-13 x 1½" long Hexagon Head Cap Screw
39A	Leg
44	½" Bolt Size x 1" OD x 5/16" thick Washer
48A	Table (sold only as assembly A-48-A)
49	Table Hinge
50	½" Dia. x 2" long Dowel Pin
51	¼"-20 x 5/16" long Cup Point Slotted Headless Set Screw
52	Table Hinge Bracket
52½	½"-13 x 1" long Hexagon Head Cap Screw
53½	No. 10-30 x ⅜" long Truss Head Machine Screw
54	¼" Dia. x ¾" long Hardened Dowel Pin
57A	Table Lifter
57½	Table Lifter Handle
58B	Table Lifter Fulcrum
58½	½"-13 Hexagon Steel Cap Nut
60	Table Lifter Latch
66	Table Lifter Link
67	Table Lifter Link Hinge Pin
68	3/32" dia. x ¾" long Cotter Pin
69	Table Lifter Link Slide Pin
72	Table Lifter Slide
75	Table Lifter Slide Cap
80A	Table Guard—Left Hand
84A	Table Guard—Left Hand Rear
171	¼"-20 x ⅝" long Flat Fillister Head Screw
M185	¼"-20 x ⅜" long Round Head Screw
M216	½" Bolt Size x ⅞" OD x 5/64 to 3/32" thick Steel Washer
415	Table Lifter Latch Fulcrum
511	5/16"-18 x ⅝" long Flat Fillister Head Screw
672	No. 10-30 x ⅜" long Round Head Screw
778A	3/16" dia. x ⅞" long Roll Pin
906B	Galley Base
908A	Galley Bracket

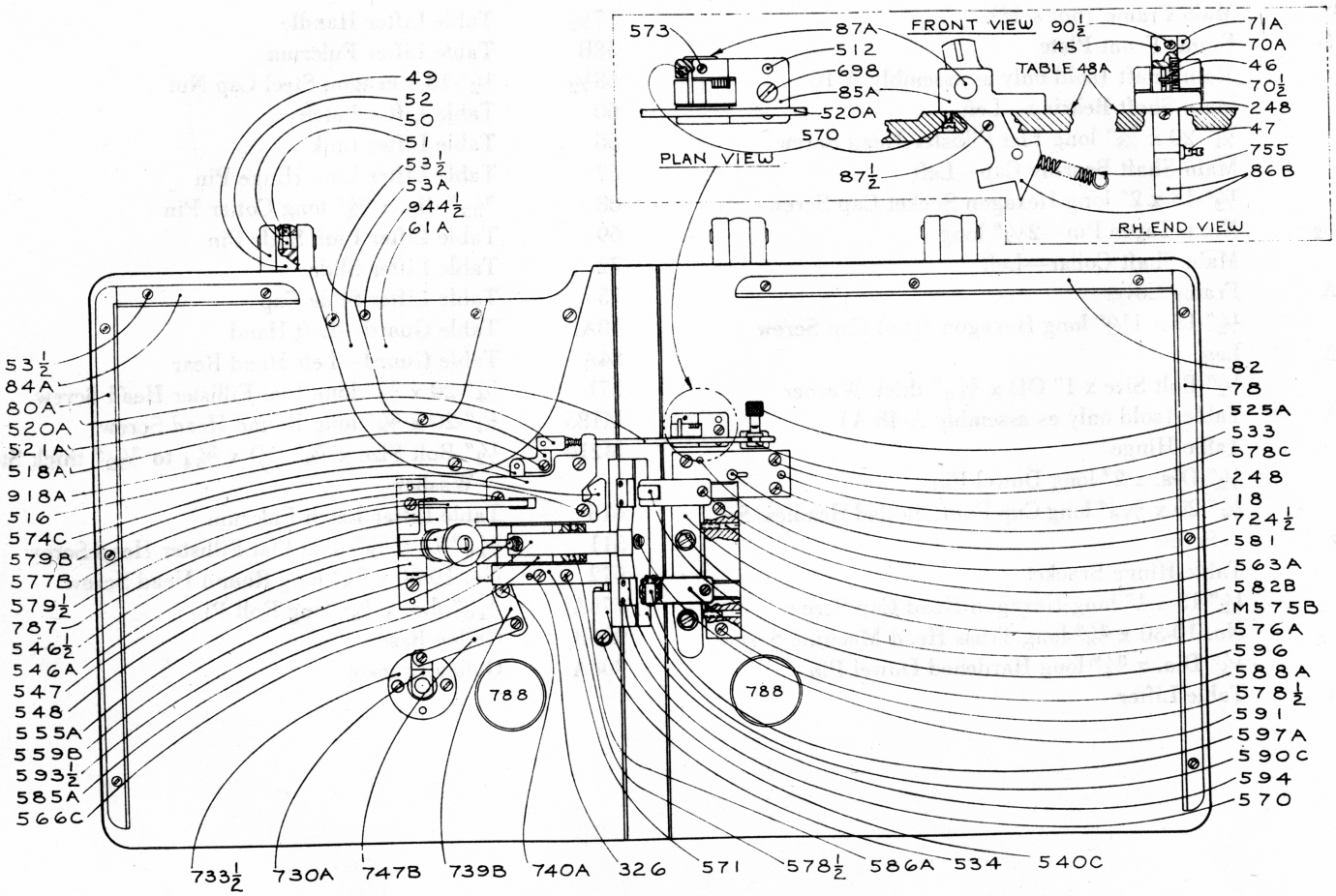

TABLE TOP ASSEMBLY

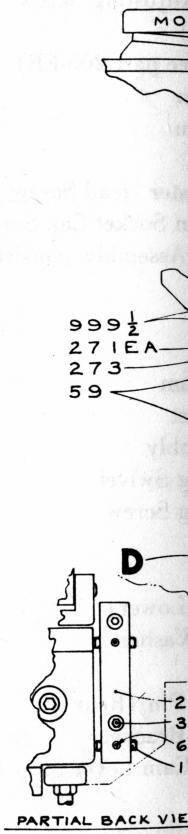

PARTIAL BACK VIE

Part No.	Description
18	¼"-20 x ⅞" long Flat Fillister Head Screw
45	3/32" dia. x 9/16" long Dowel Pin
46	1/16" dia. x ⅜" long Dowel Pin
47	Table Latch Spring Stud
48A	Table (sold only as assembly A-48-A)
49	Table Hinge
50	½" dia. x 2" long Dowel Pin
51	¼"-20 x 5/16" long Cup Point Slotted Headless Set Screw
52	Table Hinge Bracket
53A	Table Filling Piece
53½	No. 10-30 x ⅜" long Truss Head Machine Screw
61A	Table Filling Piece Opening Cover
70A	Table Latch Eccentric Bushing
70½	Table Latch Eccentric Bushing Stop
71A	Table Latch Pawl
78	Table Guard—Right Hand
80A	Table Guard—Left Hand
82	Table Guard—Right Hand Rear
84A	Table Guard—Left Hand Rear
85A	Table Latch Bracket
86B	Table Latch
87A	Table Latch Shaft
87½	No. 10-30 x ⅛" long Oval Point Slotted Headless Set Screw
90½	Table Latch Pawl Stud
248	No. 10-30 x ½" long Flat Fillister Head Screw
326	3/16" dia. x ⅞" long Dowel Pin
512	3/16" dia. x 5/8" long Dowel Pin
516	Locking Release Catch
518A	Locking Release Bell Crank
520A	Locking Release Rod
521A	Locking Release Rod Yoke
525A	Locking Release Positive Clutch Knob
533	Locking Release Tripper Holder
534	Locking Slide Safety Bumper Fulcrum Screw
540C	Locking Slide Safety Pawl Bumper (21 em—Use 595C for 22½ em)
546A	Locking Lever Body
546½	Locking Lever Arm
547	Locking Lever Handle
548	Locking Lever Handle Screw
555A	Locking Lever Anchor
559B	Locking Lever Link
563A	Locking Equalizing Bar Clamp Adjusting Screw
566C	Locking Slide
570	No. 8-36 x ⅜" long Fillister Head Screw
571	Locking Slide Guide—Front
573	No. 8-36 x 5/32" long Oval Point Slotted Headless Set Screw
574C	Locking Slide Guide—Rear
M575B	Locking Guide
576A	Locking Guide Screw
577B	Locking Slide Guide Screw—Rear
578C	Stick Stop Slide and Locking Adjusting Block Guide
578½	5/16"-18 x ⅞" long Flat Fillister Head Screw
579B	Locking Slide Safety Pawl—Rear
579½	5/16"-18 x 1⅜" long Flat Fillister Head Screw
581	¼" dia. x ⅞" long Dowel Pin
582B	Stick Stop Slide and Locking Adjusting Block Guide Adjusting Screw
585A	Locking Equalizing Lever
586A	Locking Equalizing Lever Stud

Table Top Assembly · Plate No. 4

Part No.	Description
588A	Locking Equalizing Bar Clamp
590C	Locking Equalizing Bar
591	Locking Equalizing Bar Stud
593½	Locking Equalizing Lever Adjusting Screw Cap
594	Locking Equalizing Bar Shoe
596	Locking Equalizing Bar Clamp Roller
597A	Locking Equalizing Bar Clamp Roller Fulcrum
698	¼"-20 x ½" long Flat Fillister Head Screw
724½A	Stick Stop Slide Pin
730A	Safety Lever
A733A	Safety Lever Shaft Bearing Assembly
739B	Safety Operating Lever
740A	Safety Operating Lever Fulcrum
747B	Safety Connecting Rod
755	Safety Finger Spring—Upper
787	¼"-20 x ¾" long Button Head Socket Screw
788	Lock Down Knob
918A	Slug Pusher Cam Stud
944½	No. 8-36 x 5/32" long Truss Head Screw

Delivery Slide Assemb

Part No.	
135	No. 10-30 x
171	¼"-20 x 5/8
216	No. 8-36 x
230	¼"-20 Stan
248	No. 10-30 x
325	No. 8-36 He
415	10-30 Shou (Same as
419	No. 10-30 S
425	⅛" Dia. x
529	3/16" OD x Spring
570	No. 8-36 x
573	No. 8-36 x Set Screw
622½	⅛" Dia. x
636	Slug Holde
636½	No. 8-36 x Set Screw
645B	Slug Holde
645½	Slug Holde
A646A	Slug Holde
A646½A	Slug Holde
A650J	Delivery S
650J	Delivery S
651½	Mold Wipe
652½	Delivery S
654½	⅛" Dia. x
A655D	Delivery A
A655D-1	Delivery A
655D	Delivery A
655½	Delivery A

Plate No. 5

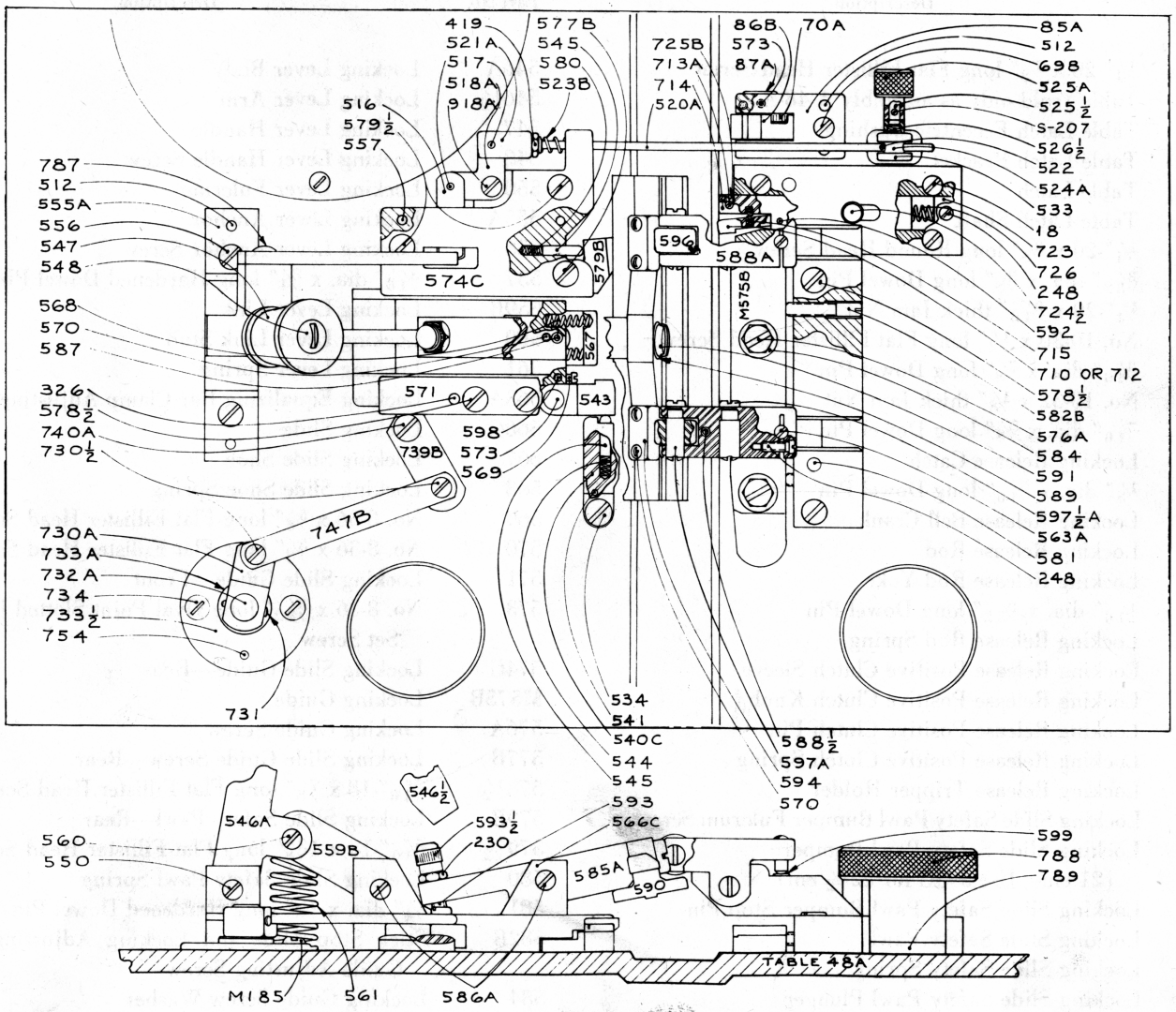

TABLE TOP PARTS
(CROSS-SECTIONED TO SHOW INTERNAL PARTS)

Part No.	Description
18	¼"-20 x ⅞" long Flat Fillister Head Screw
48A	Table (sold only as assembly A-48-A)
70A	Table Latch Eccentric Bushing
85A	Table Latch Bracket
86B	Table Latch
87A	Table Latch Shaft
M185	¼"-20 x ⅜" long Round Head Screw
S207	3/32" dia. x ⅜" long Dowel Pin
230	¼"-20 x 9/16" thick Jam Nut
248	No. 10-30 x ½" long Flat Fillister Head Screw
326	3/16" dia. x ⅞" long Dowel Pin
419	No. 10-32 x ⅛" thick Jam Nut
512	3/16" dia. x ⅝" long Dowel Pin
516	Locking Release Catch
517	⅛" dia. x 9/16" long Dowel Pin
518A	Locking Release Bell Crank
520A	Locking Release Rod
521A	Locking Release Rod Yoke
522	1/16" dia. x 9/32" long Dowel Pin
523B	Locking Release Rod Spring
524A	Locking Release Positive Clutch Sleeve
525A	Locking Release Positive Clutch Knob
525½	Locking Release Positive Clutch Pin
526½	Locking Release Positive Clutch Spring
533	Locking Release Tripper Holder
534	Locking Slide Safety Pawl Bumper Fulcrum Screw
540C	Locking Slide Safety Pawl Bumper (21 em—Use 595C for 22½ em)
541	Locking Slide Safety Pawl Bumper Stop Pin
543	Locking Slide Safety Pawl
544	Locking Slide Safety Spring
545	Locking Slide Safety Pawl Plunger
546A	Locking Lever Body
546½	Locking Lever Arm
547	Locking Lever Handle
548	Locking Lever Handle Screw
550	Locking Lever Fulcrum
555A	Locking Lever Anchor
556	Locking Lever Anchor Screw
557	3/16" dia. x ¾" long Hardened Dowel Pin
559B	Locking Lever Link
560	Locking Lever Link Stud
561	Locking Lever Spring
563A	Locking Equalizing Bar Clamp Adjusting Screw
566C	Locking Slide
567	Locking Slide Shoe
568	Locking Slide Shoe Spring
569	No. 8-36 x ⅝" long Flat Fillister Head Screw
570	No. 8-36 x ⅜" long Flat Fillister Head Screw
571	Locking Slide Guide—Front
573	No. 8-36 x 5/32" long Oval Point Slotted Headless Set Screw
574C	Locking Slide Guide—Rear
M575B	Locking Guide
576A	Locking Guide Screw
577B	Locking Slide Guide Screw—Rear
578½	5/16"-18 x ⅞" long Flat Fillister Head Screw
579B	Locking Slide Safety Pawl—Rear
579½	5/16"-18 x 1⅜" long Flat Fillister Head Screw
580	Locking Slide Safety Pawl Spring
581	¼" dia. x ⅞" long Hardened Dowel Pin
582B	Stick Stop Slide and Locking Adjusting Block Guide Adjusting Screw
584	Locking Guide Screw Washer

Part No.	
585A	Locking E
586A	Locking E
587	Locking E
588A	Locking E
588½	Locking E
589	Locking E
590C	Locking E
591	Locking E
592	Locking E
593	Locking E
593½	Locking E
594	Locking E
596	Locking E
597A	Locking E
597½A	Locking I Screw
598	Locking S
599	Locking E
698	¼"-20 x ⅞
710	Stick Stop
713A	Stick Stop

Table Top Parts · Plate No. 5

Part No.	Description
585A	Locking Equalizing Lever
586A	Locking Equalizing Lever Stud
587	Locking Equalizing Lever Spring
588A	Locking Equalizing Bar Clamp
588½	Locking Equalizing Bar Clamp Spring
589	Locking Equalizing Bar Lock Washer
590C	Locking Equalizing Bar
591	Locking Equalizing Bar Stud
592	Locking Equalizing Bar Stop Pin
593	Locking Equalizing Lever Adjusting Screw
593½	Locking Equalizing Lever Adjusting Screw Cap
594	Locking Equalizing Bar Shoe
596	Locking Equalizing Bar Clamp Roller
597A	Locking Equalizing Bar Clamp Roller Fulcrum
597½A	Locking Equalizing Bar Clamp Roller Fulcrum Screw
598	Locking Slide Safety Pawl Fulcrum
599	Locking Equalizing Bar Screw Rest
698	¼"-20 x ½" long Flat Fillister Head Screw
710	Stick Stop (21-em—use 712 for 22½ em)
713A	Stick Stop Adjusting Screw Set Screw
714	Stick Stop Adjusting Screw
715	Stick Stop Spring
723	Stick Stop Slide Bumper Block
724½	Stick Stop Slide Knob
725B	Stick Stop Slide
726	Stick Stop Slide Spring
730A	Safety Lever
730½	Safety Lever Screw
731	No. 2 x 1" long Taper Pin
732A	Safety Lever Shaft
A733A	Safety Lever Shaft Bearing Assembly
734	¼"-20 x ½" long Round Head Screw
739B	Safety Operating Lever
740A	Safety Operating Lever Fulcrum
747B	Safety Connecting Rod
754	3/16" dia. x ½" long Hardened Dowel Pin
787	¼"-20 x ¾" long Hexagon Socket Button Head Screw
788	Lock Down Knob
789	Lock Down Knob Washer
918A	Slug Pusher Cam Stud

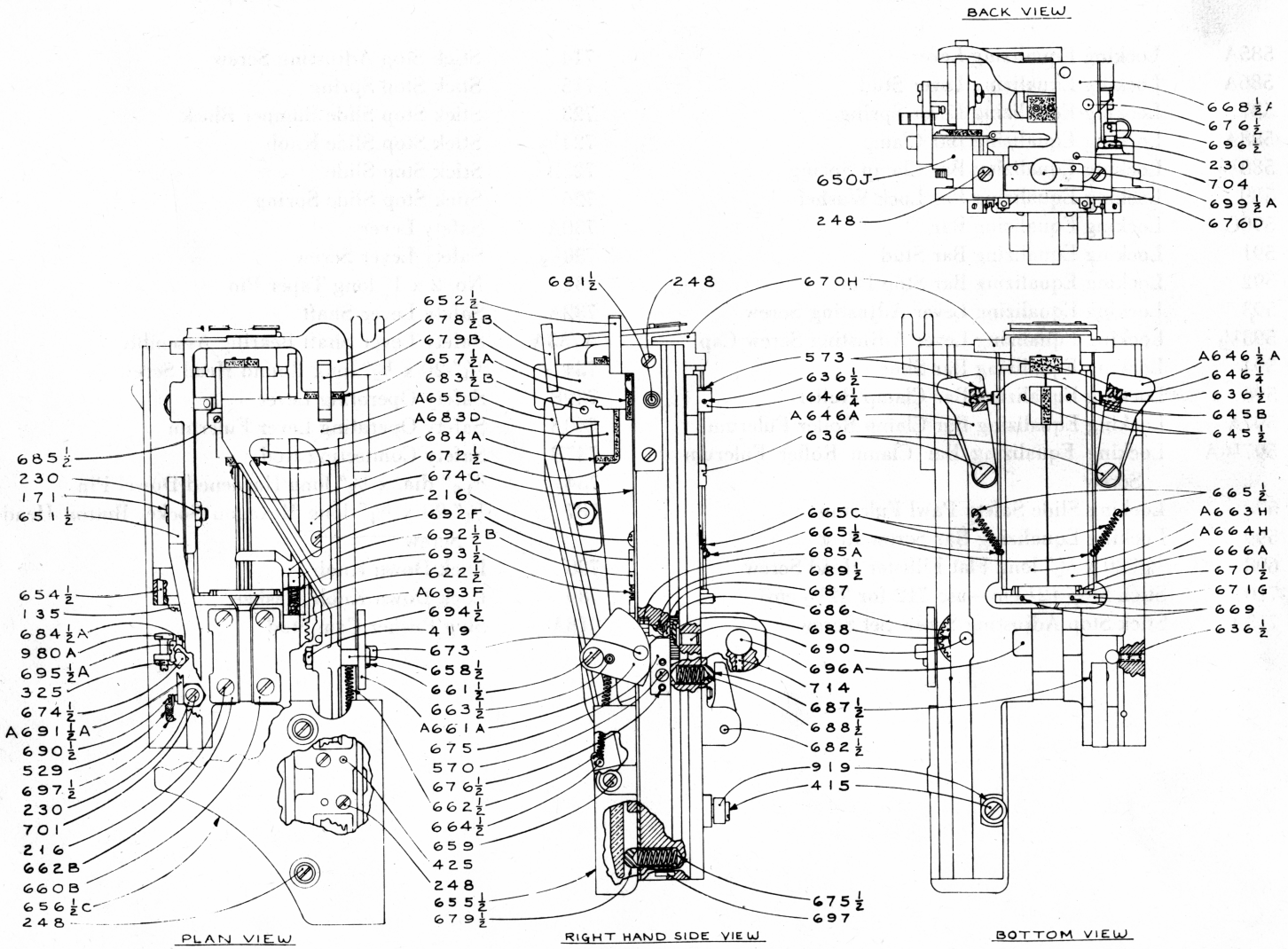

DELIVERY SLIDE ASSEMBLY

787
512
555A
556
547
548
568
570
587
326
578½
740A
730½
730A
733A
732A
734
733½
754
560
550

Delivery Slide Assembly · Plate No. 6

Part No.	Description
135	No. 10-30 x ½" long Round Head Screw
171	¼"-20 x ⅝" long Flat Fillister Head Screw
216	No. 8-36 x ¼" long Round Head Screw
230	¼"-20 Standard Jam Nut
248	No. 10-30 x ½" long Flat Fillister Head Screw
325	No. 8-36 Hexagon Nut
415	10-30 Shoulder Screw (Same as Table Lifter Latch Fulcrum)
419	No. 10-30 Standard Jam Nut
425	⅛" Dia. x ½" long Dowel Pin
529	3/16" OD x 2 9/32" Overall Length Extension Spring
570	No. 8-36 x ⅜" long Fillister Head Machine Screw
573	No. 8-36 x 5/32" long Oval Point Slotted Headless Set Screw
622½	⅛" Dia. x 1 3/64" long Dowel Pin
636	Slug Holder Cam Stud
636½	No. 8-36 x 7/16" long Oval Point Slotted Headless Set Screw
645B	Slug Holder Operating Plate
645½	Slug Holder Operating Plate Rivet
A646A	Slug Holder Cam Assembly (Right Hand)
A646½A	Slug Holder Cam Assembly (Left Hand)
A650J	Delivery Slide Assembly
650J	Delivery Slide
651½	Mold Wiper Arm—Front
652½	Delivery Slide Centralizing Fork
654½	⅛" Dia. x 9/32" long Dowel Pin
A655D	Delivery Arm Assembly
A655D-1	Delivery Arm Sub-Assembly
655D	Delivery Arm (sold only as assembly A-655-D)
655½	Delivery Arm Bracket Guard
656½C	Delivery Arm Bracket Guard Cover
657½A	Delivery Arm Shock Pad (Leather)
658½	Delivery Arm Bushing
659	Delivery Arm Fulcrum
660B	Slug Guide—Right Hand
A661A	Delivery Arm Cam Assembly
661A	Delivery Arm Cam
661½A	Delivery Arm Cam Stud
662B	Slug Guide—Left Hand
662½	Delivery Arm Cam Spring
A663H	Slug Holder Assembly—Right Hand
663H	Slug Holder—Right Hand (sold only as assembly A-663-H)
663½	Delivery Arm Cam Spring Stud—Long Shoulder
A664H	Slug Holder Assembly—Left Hand
664H	Slug Holder—Left Hand (sold only as assembly A-664-H)
664½	Delivery Arm Cam Spring Stud—Short Shoulder
665C	Slug Holder Spring
665½	Slug Holder Spring Stud
666A	Slug Holder Stop Pin
668½A	Mold Wiper Arm Extension
669	Slug Holder Equalizing Screw
670H	Slug Holder Bearing Plate—Rear
670½	Slug Holder Bearing Pin
671G	Slug Holder Bearing Plate—Front
672½	Slug Support Felt Stud
673	Delivery Arm Cam Operating Stud
674C	Delivery Slide Cover
674½A	Mold Wiper Arm Cam Rest
675	Delivery Arm Cam Rest
675½	Delivery Arm Spring

Delivery Slide Assembly · Plate No. 6

Part No.	Description
676D	Mold Wiper
676½	⅛" Dia. x ⅜" long Dowel Pin
A678½B	Mold Wiper Arm Assembly
678½B	Mold Wiper Arm—Rear
679B	Delivery Arm and Mold Wiper Arm Guide
679½	Delivery Arm Spring Plunger
681½	¼"-20 x ⅜" long Cup Point Hexagon Socket Set Screw
682½	Mold Wiper Arm Fulcrum
A683D	Slug Support Assembly
683D	Slug Support
683½B	Slug Support Fulcrum
684A	Slug Support Felt
684½A	No. 8 x 7/16" OD Washer
685A	Slug Carrier Gear—Upper
685½	No. 5-44 x 11/64" long Oval Point Slotted Headless Set Screw
686	Slug Carrier Gear—Lower
687	Slug Carrier Gear Spring Washer
687½	Mold Wiper Arm Plunger
688	Slug Carrier Gear Clamp Washer
688½	Mold Wiper Arm Plunger Spring
689½	1/16" Dia. x ¼" long Dowel Pin
690	Slug Carrier Gear Stud
690½	Mold Wiper Arm Cam Spring Stud
A691½A	Mold Wiper Arm Cam Assembly
691½A	Mold Wiper Arm Cam
692F	Slug Puller
692½B	Slug Puller Bracket
A693F	Slug Carrier Assembly
693F	Slug Carrier Rack
693½	Slug Puller Spring
694½	Slug Puller Hinge Pin
695½A	Mold Wiper Arm Cam Fulcrum
696A	Delivery Slide Pin
696½	Mold Wiper Arm Rest Screw
697	Delivery Slide Operating Rack Stop Pin
697½	Mold Wiper Arm Cam Return Spring Stud
A699	Slug Carrier Gear Assembly, consisting of parts, 685A, 686, 687, 688 and 689½ (Not illustrated)
699½A	Mold Wiper Lock Stud
701	¼"-20 x 1" long Oval Point Slotted Headless Set Screw
704	Mold Wiper Stop Pin
714	Delivery Slide Pin Screw
919	Slug Pusher Cam Roll
980A	Mold Wiper Arm Cam Adjusting Set Screw

Table Top Assemb

Part No.	
18	¼"-20 x
45	3/32" dia
46	1/16" dia
47	Table La
48A	Table (s
49	Table H
50	½" dia.
51	¼"-20 x Screw
52	Table H
53A	Table Fi
53½	No. 10-3
61A	Table Fi
70A	Table La
70½	Table La
71A	Table La
78	Table G
80A	Table G
82	Table G
84A	Table G
85A	Table La
86B	Table La
87A	Table La
87½	No. 10-3 Set Sc
90½	Table La
248	No. 10-3
326	3/16" dia
512	3/16" dia
516	Locking
518A	Locking
520A	Locking

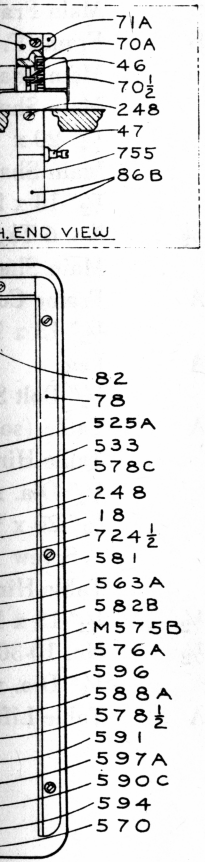

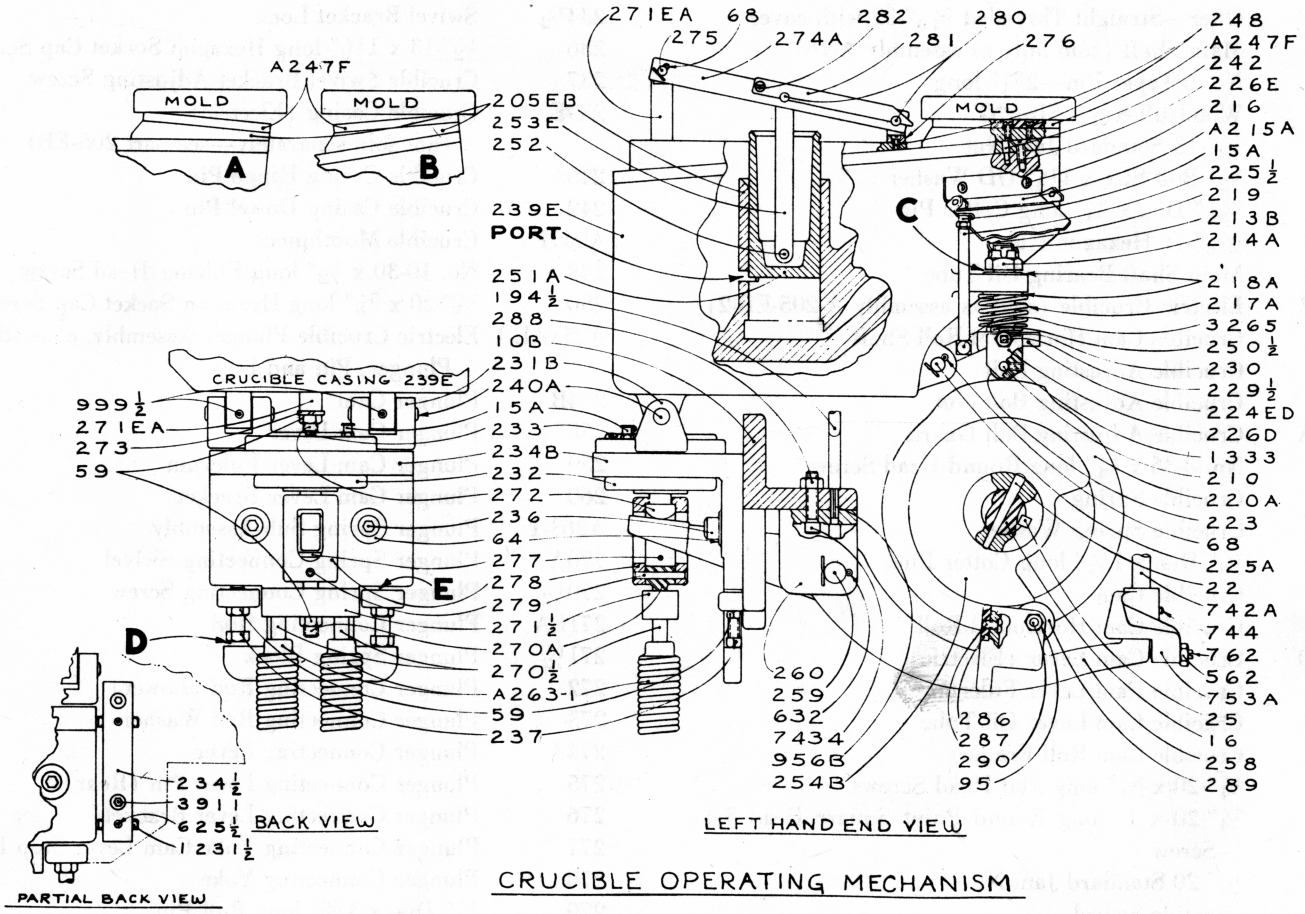

CRUCIBLE OPERATING MECHANISM

Crucible Operating Mechanism · Plate No. 7

Part No.	Description
10B	Main Frame (not sold)
15A	Oiler—Straight Threaded 5/16"-32 with cover
16	Main Shaft (sold only as assembly A-16)
22	No. 6 Taper Pin—2¾" long
25	Woodruff Key—Size "G"
59	½"-13 Standard Jam Nut
64	½" Bolt Size x 1¼" OD Washer
68	3/32" Dia. x ¾" long Cotter Pin
95	5/16"-16 Hexagon Nut
194½	Main Shaft Bearing Oil Tube
205EB	Electric Crucible (sold as assembly A-205-EB-2)
210	Crucible Cam Horizontal Roll Shaft
213B	Crucible Adjusting Bolt
214A	Crucible Adjusting Bolt Nut
A215A	Crucible Adjusting Bolt Guard
216	No. 8-36 x ¼" long Round Head Screw
217A	Crucible Spring
218A	Crucible Spring Washer
219	⅛" Dia. x 1¼" long Cotter Pin
220A	Crucible Cam
223	Crucible Cam Horizontal Roll
224ED	Crucible Cam Lever (Electric)
225A	Crucible Cam Lever Fulcrum
225½	Crucible Cam Lever Oil Tube
226D	Crucible Cam Roll Frame
226E	¼"-20 x ¾" long Flat Head Screws
229½	¼"-20 x 1" long Round Point Square Head Set Screw
230	¼"-20 Standard Jam Nut
231B	Crucible Swivel
232	Crucible Swivel Nut
233	Crucible Swivel Nut Pin
234B	Crucible Swivel Bracket
234½	Swivel Bracket Lock
236	½"-13 x 1½" long Hexagon Socket Cap Screw
237	Crucible Swivel Bracket Adjusting Screw
239E	Crucible Casing (Electric) (not sold separately—see part 205-EB)
240A	Crucible Casing Hinge Pin
242	Crucible Casing Dowel Pin
A247F	Crucible Mouthpiece
248	No. 10-30 x ½" long Fillister Head Screw
250	¼"-20 x ⅝" long Hexagon Socket Cap Screw
A251AE-1	Electric Crucible Plunger Assembly, consisting of Plunger, Pin and Link
254B	Plunger Cam
258	Plunger Cam Lever
259	Plunger Cam Lever Fulcrum
260	Plunger Cam Lever Bracket
A263-1	Plunger Spring Sub-Assembly
270A	Plunger Spring Connecting Swivel
270½	Plunger Spring Connecting Screw
271EA	Plunger Connecting Rod
271½	Plunger Spring Block
272	Plunger Connecting Rod (Lower)
273	Plunger Connecting Rod Washer
274A	Plunger Connecting Lever
275	Plunger Connecting Lever Pin (Rear)
276	Plunger Connecting Lever Bracket
277	Plunger Connecting Yoke Cam Lever Stop Pin
278	Plunger Connecting Yoke
279	¼" Dia. x 1⅞" long Roll Pin
280	Plunger Connecting Yoke Pin (Front)
281	Plunger Connecting Lever Pin Holder

Table Lifter · Plate

Part No.	
10B	Main Fr
11B	Frame F
16	Main Sh
17	Main Sh
18	¼"-20 x
19	Main Sh
20	½"-13 x
22½	No. 6 Ta
23	Main Sh
30A	Frame C
38	½"-13 x
39A	Leg
44	½" Bolt
48A	Table (s
49	Table H
50	½" Dia.
51	¼"-20 x Screw
52	Table H
52½	½"-13 x
53½	No. 10-3
54	¼" Dia.
57A	Table L

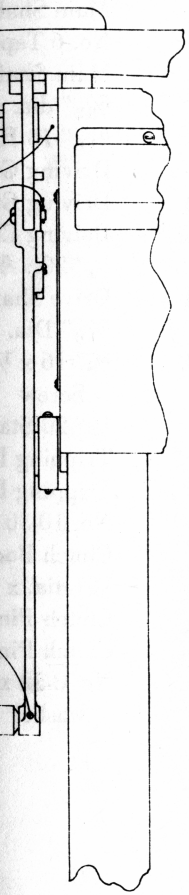

Crucible Operating Mechanism · Plate No. 7

Part No.	Description
282	Plunger Connecting Lever Holder Stud
286	Plunger Cam Lever Shoe
287	Plunger Cam Lever Shoe Screw
288	3/8"-16 Hexagon Nut
289	Plunger Cam Lever Roll
290	Plunger Cam Lever Roll Stud
562	5/16"-18 Standard Jam Nut
6251/2	1/4"-20 x 5/8" long Oval Point Self-Locking Hexagon Socket Set Screw
632	3/32" dia. x 1 1/4" long Cotter Pin
742A	Safety Shaft
744	No. 2 Taper Pin—1 1/4" long
753A	Safety Finger
762	5/16"-18 x 1 1/2" long Oval Point Slotted Headless Set Screw
956B	1/4" dia. x 1" long Roll Pin
9991/2	1/4"-20 x 3/8" long Half Dog Point Hexagon Socket Set Screw
12311/2	3/8"-16 x 1 1/2" long Cup Point Hexagon Socket Set Screw
1333	1/4"-20 x 1/2" long Cup Point Hexagon Socket Set Screw
3265	1/8" x 90° Special Street Elbow
3911	3/8"-16 x 1 1/4" long Hexagon Socket Head Cap Screw
7434	3/8"-16 x 1 3/4" long Hexagon Socket Head Cap Screw

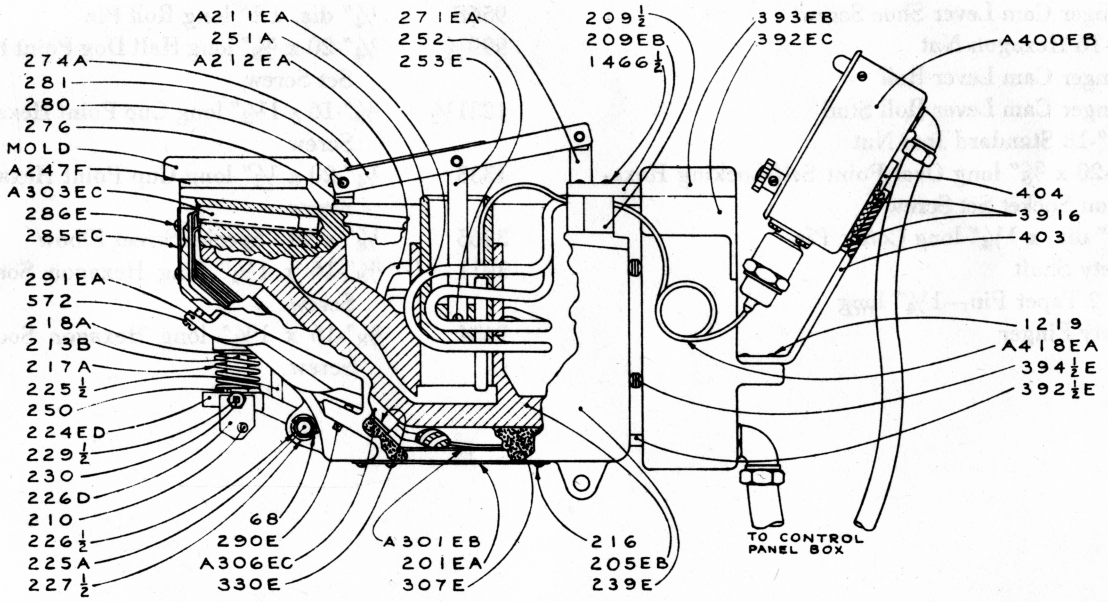

ELECTRIC CRUCIBLE CROSS-SECTION

Clutch Mechanism

Part No.	
16	Main Sl
21	Main Sl
22½	No. 6 T
28	Main Sl
68	3/32" dia
95	5/16"-18
150	Driving
151A	Driving
163C	Driving
171	¼"-20 x
180A	Drive S
182	5/16" Di
M208	3/8"-16 x Screw
230	¼"-20 S
408	Trippin
418	Trippin
419	No. 10-
423	Clutch
425	⅛" dia.
426	Clutch
427	Clutch
429	No. 8-3 wash

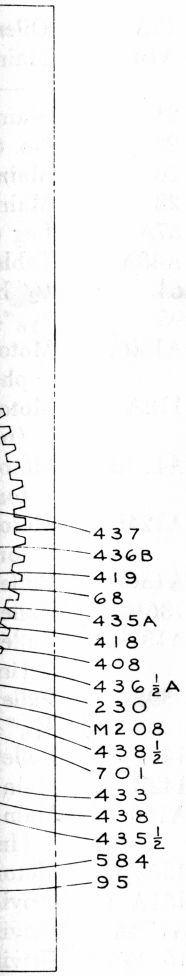

Electric Crucible Cross Section · Plate No. 8

Part No.	Description
68	3/32" dia. x 3/4" long Cotter Pin
201EA	Bottom Casing Cover
205EB	Electric Crucible (sold as assembly A-205-EB-2)
209EB	Electric Crucible Unit Clamp
209½	Electric Crucible Heater Spacer
210	Crucible Cam Horizontal Roll Shaft
A211EA	Electric Crucible Heater—Right Hand (Specify Voltage)
A212EA	Electric Crucible Heater—Left Hand (Specify Voltage)
213B	Crucible Adjusting Bolt
216	No. 8-36 x 1/4" long Round Head Screw
217A	Crucible Spring
218A	Crucible Spring Washer
224ED	Electric Crucible Cam Lever
225A	Crucible Cam Lever Fulcrum
225½	Crucible Cam Lever Oil Tube
226D	Crucible Cam Roll Frame
226½	3/8"-16 Slotted Hexagon Nut
227½	3/8" bolt size x 3/4" OD x 3/16" thick Steel Washer
229½	1/4"-20 x 1" long Round Point Square Head Set Screw
230	1/4"-20 x 9/64" thick Standard Jam Nut
239E	Electric Crucible Casing (not sold separately see part 205EB)
A247F	Crucible Mouthpiece
250	1/4"-20 x 5/8" long Hexagon Head Cap Screw
251A	Plunger (not sold separately—sold as A-251-AE-1)
252	5/16" dia. x 2 1/4" long Hardened Dowel Pin (not sold separately)
253E	Electric Crucible Plunger Link (not sold separately—sold as part of assembly A-251-AE-1)
271EA	Plunger Connecting Rod
274A	Plunger Connecting Lever
276	Plunger Connecting Lever Bracket
280	Plunger Connecting Yoke Pin—Front
281	Plunger Connecting Lever Pin Holder
285EC	Mouth Unit Cover
286E	Mouth Unit Cover Screw
290E	5/16"-18 x 1" long Cup Point Hexagon Socket Headless Set Screw
291EA	Throat Cover
A301EB	Crucible Wiring Assembly
A303EC	Mouth Heater (Specify Voltage)
A306EC	Crucible Throat Heater Assembly (Specify Voltage)
307E	Magnesium Cement
330E	Throat Cover Pad
392EC	Terminal Box (sold only as assembly A-392-EC)
392½E	Ovaltube Conduit
393EB	Terminal Box Cover (sold only as part of assembly A-392-EC)
394½E	Terminal Box Mounting Washer
A400EB	Ludlow Dual Indicating Thermostat
403	Thermostat Bracket
404	Thermostat Bracket Plate
A418EA	Thermostat Mercury Tube
572	5/16"-18 x 1" long Flat Fillister Head Screw
1219	No. 10-32 x 5/8" long Round Head Screw
1466½	1/4"-20 x 3/4" long Fillister Head Cap Screw
3916	No. 10-32 x 3/8" long Flat Head Hexagon Socket Cap Screw

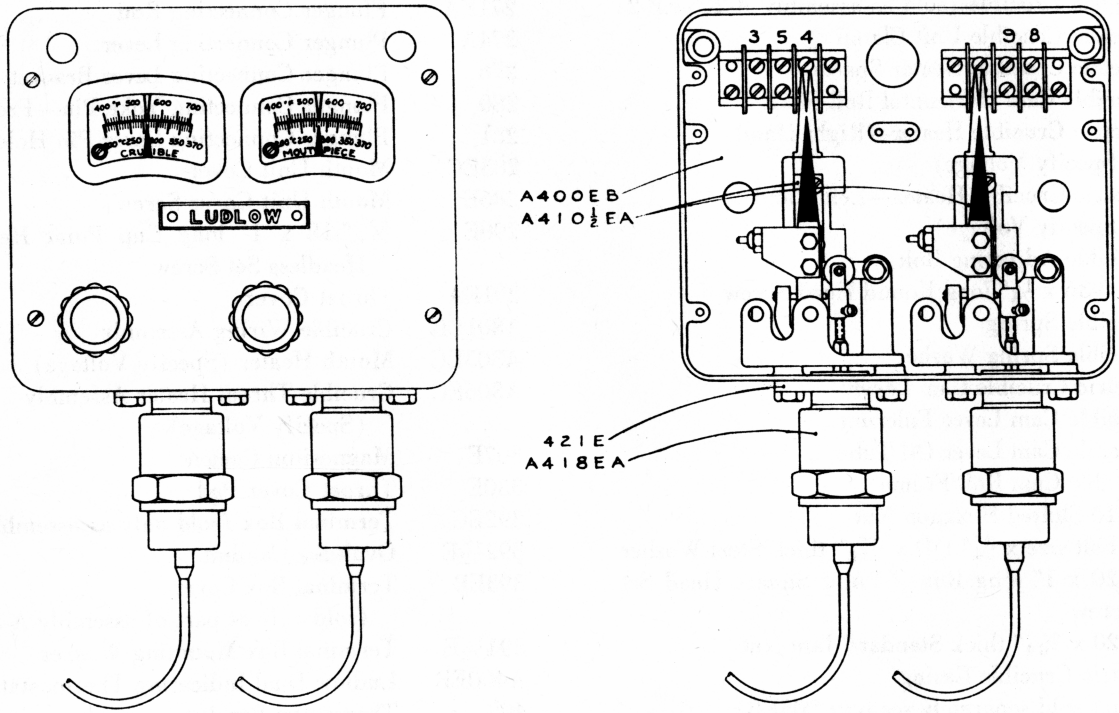

DUAL INDICATING THERMOSTAT

Machine Drive Parts

Part No.	
15A	Oiler
A16	Main Sha —inclu
21	Main Sha
22½	No. 6 Ta
26	Main Sha
28	Main Sha
37A	Leg (Rig
A48A	Table As
64	½" bolt s
95	5/16"-18
A100A	Motor— phase)
118A	Motor Sl (not il
A123B	Motor Pu for 14
A124B	Motor Pu for 17
A136D	Pulley
136½	Pulley K
A137C	Pulley Sl (inclu
139B	Pulley P
140A	3/16" dia
140½	Pulley P
142B	Main Dr
A150	Main Sh (Inclu
150½C	Motor W
151A	Driving
A153A	Driving
153½A	Driving
154A	Driving
155B	Driving

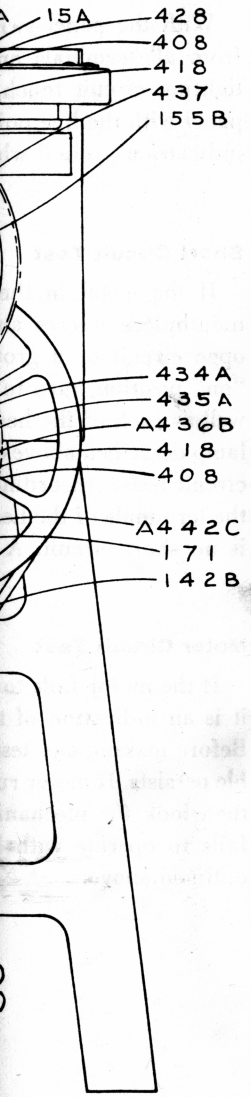

Dual Indicating Thermostat · Plate No. 9

Part No.	Description
A400EB	Dual Indicating Thermostat
A410½EA	Thermostat Microswitch
A418EA	Thermostat Mercury Tube
421E	Mercury Element Flange

Plate No. 10

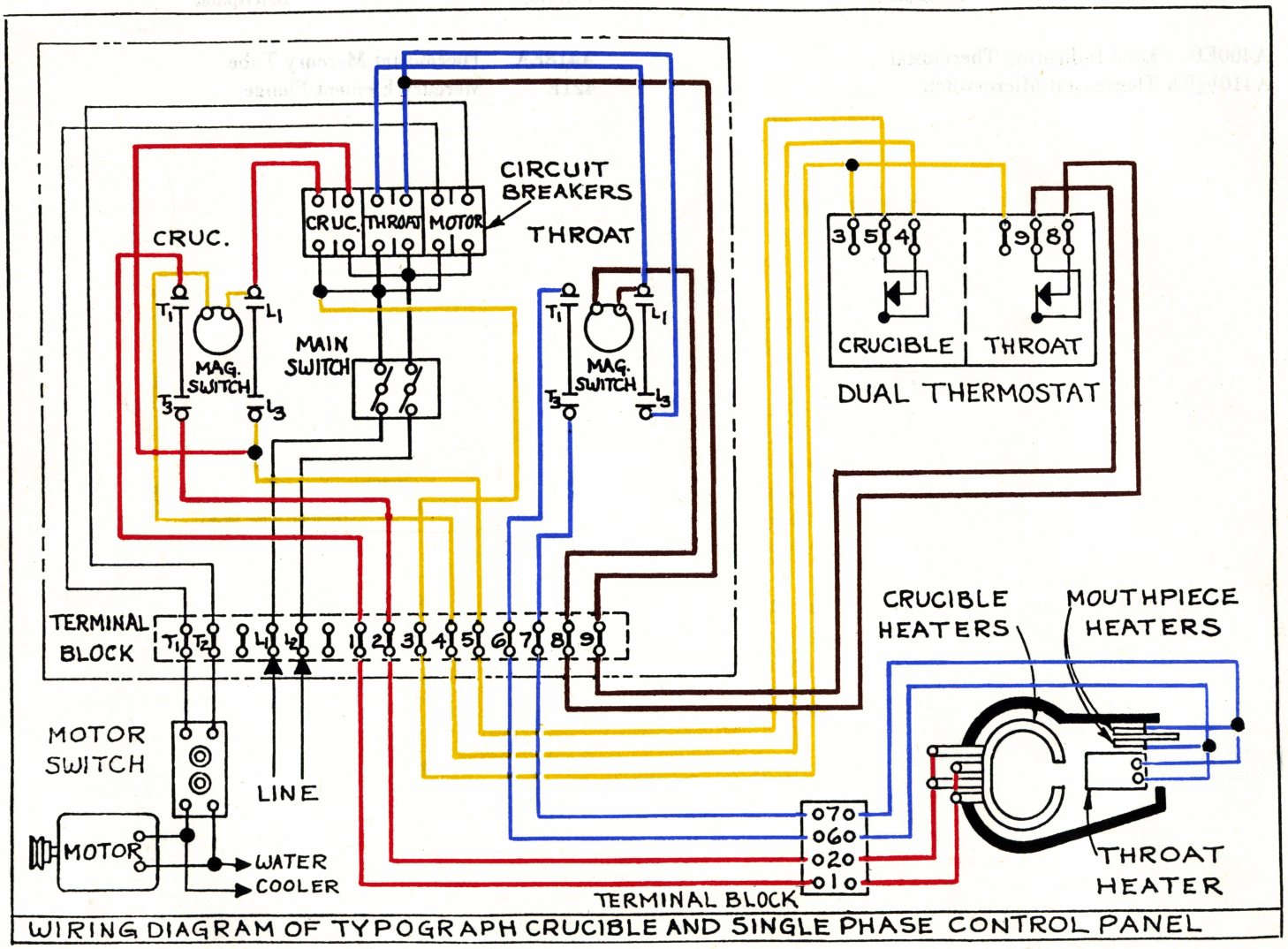

WIRING DIAGRAM OF TYPOGRAPH CRUCIBLE AND SINGLE PHASE CONTROL PANEL

Ground Test

With the panel sw
from all terminals
lighting circuit touc
panel with the live p
indicates a ground w

Short Circuit Test

If the metal in t
mouthpiece freezes
open circuit or a g
"on" position, turn
well as each of the h
lamp described abov
circuit tests. An ord
the terminals of the
is no short circuit.

Motor Circuit Test

If the motor fails
it is an indication o
Before making any
ble persists. If motor
then look for mech
fails to operate wit
outlined above.

n electrical circuit and

of a circuit so that the
tended.

ouble

it breakers. In case of
automatically to "off"
witch circuit breaker to
lectrical trouble will be
e metal in the crucible
machine. Variations of
cible, throat or mouth-
f the motor is confined

ce test points on power
ese terminals, the lamp
t, test the main cut-out

d, with test lamp short-
rminals of each circuit.

amp, the failure may be
ction, a defective hand
e corrected.

Plate No. 11

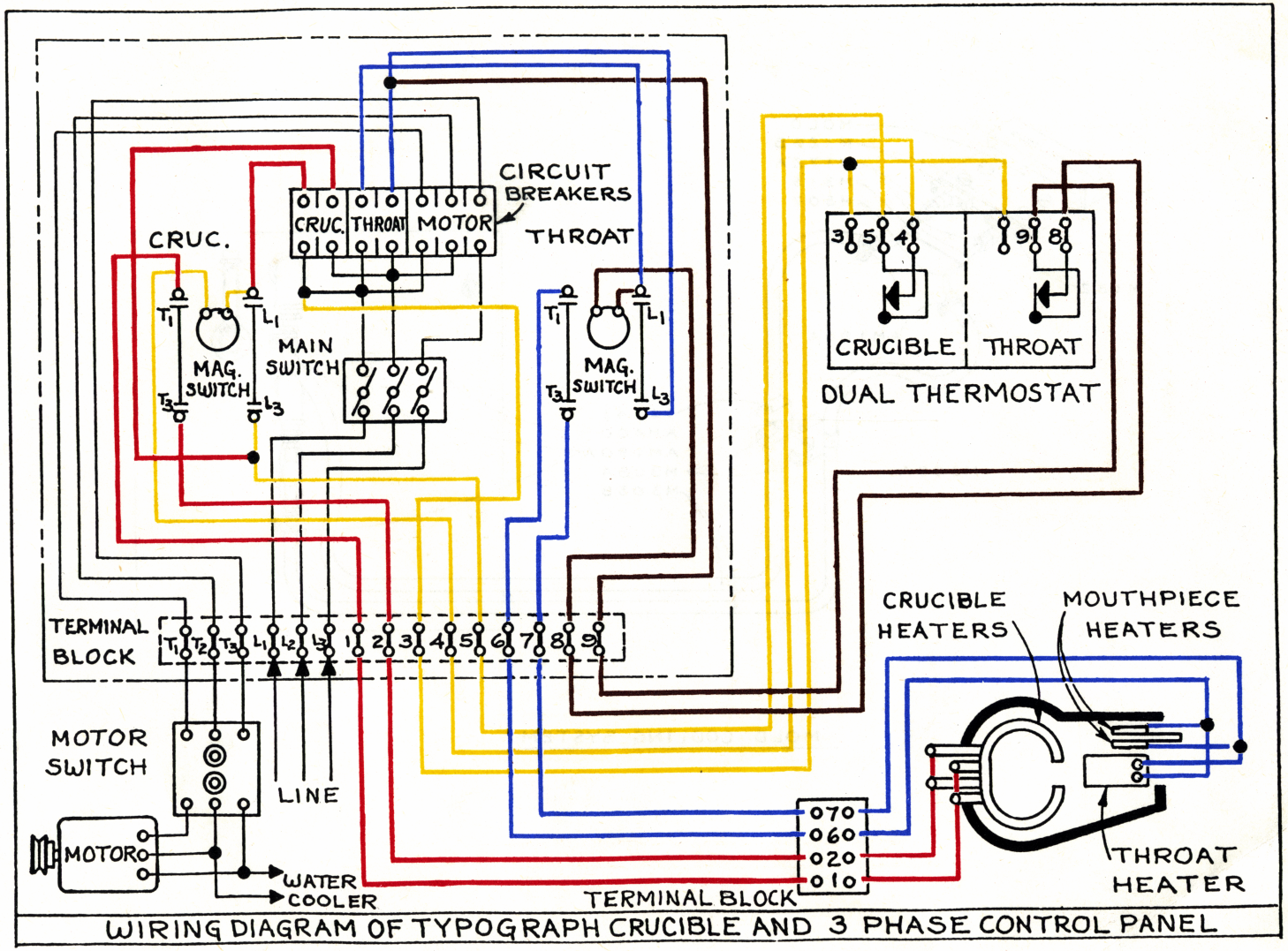

WIRING DIAGRAM OF TYPOGRAPH CRUCIBLE AND 3 PHASE CONTROL PANEL

Plate No. 12

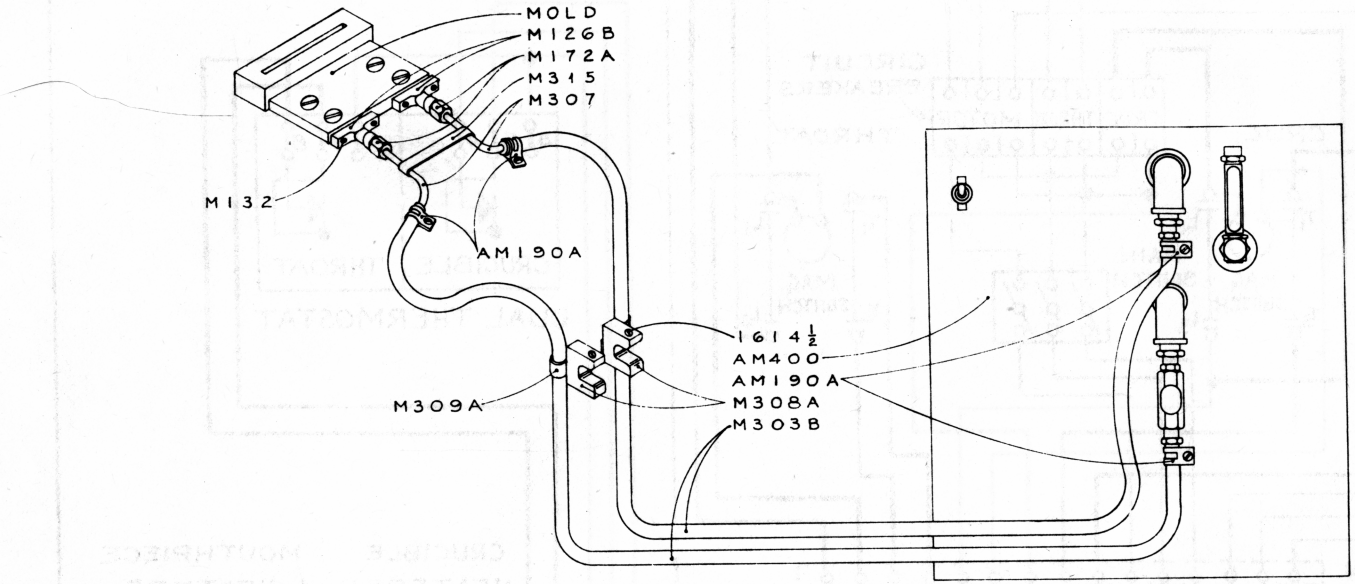

MOLD COOLING SYSTEM

Metal Mold Wiper

After the machine
lower edge of the M
rounded off to such a
clean. To replace mo
remove it from unde
under the head of th
place.

To adjust the Mo
machine by hand unt
of its travel, at whic
mold wiper arm abo
correct, loosen Chec
arm near its fulcrum
be turned until the
tighten nut.

To adjust the mold
hand until the delive
its travel toward the
to the front of the n

Loosen Check Nu
between Adjusting
A678½B, and adjus
2-pt. lead. Then tigh

To adjust the Mol
follows:

Operate the mach
reached the farthest
machine, at which p
tripped by contact o
Mouthpiece Wiper
ment may be mad
Adjustment Screw,
obtained. Operate th
ing the power.

movable parts as
enerally.

in, 275.
removed.
til the cam shaft
on.

d for any reason,
very thoroughly
l on this shoulder
e ribs of the slug.
llel with the mold.

d A664H, remove
g the Mouthpiece
the left side of the
ck, A695A, which
e slide bottom side
ating Plates, 645B,
ght metal, such as
st the sides of the
s the Slug Holder
ders should then be
is position, loosen
ing Screws, 636½,
after which tighten

ug Holder Bearing
slug holders, when
the two shoulders
ts, should be of the
he opening in the
machine. Replace

Mold Cooling System · Plate No. 12

Part No.	Description
M126B	Water Cooled Mold Connectors
M132	No. 8-32 x 3/8" long Oval Fillister Head Screws
M171A	Water Cooled Mold Copper Tube Compression Sleeve
M172A	Water Cooled Mold Copper Tube Connection Nut
AM190A	Water Cooled Mold Hose Clamp
231E	No. 10-24 x ½" long Round Head Screw
M303B	Water Hose
M307	Mold Connection Adapter
M308A	Water Hose Frame Clamp
M309A	Water Hose Strap Clamp
M315	Mold Connection Adapter Clip
AM400	Ludlow Water Cooler—Specify Voltage
1614½	5/16"-18 x ½" long Cup Point Hexagon Socket Set Screw

Plate No. 13

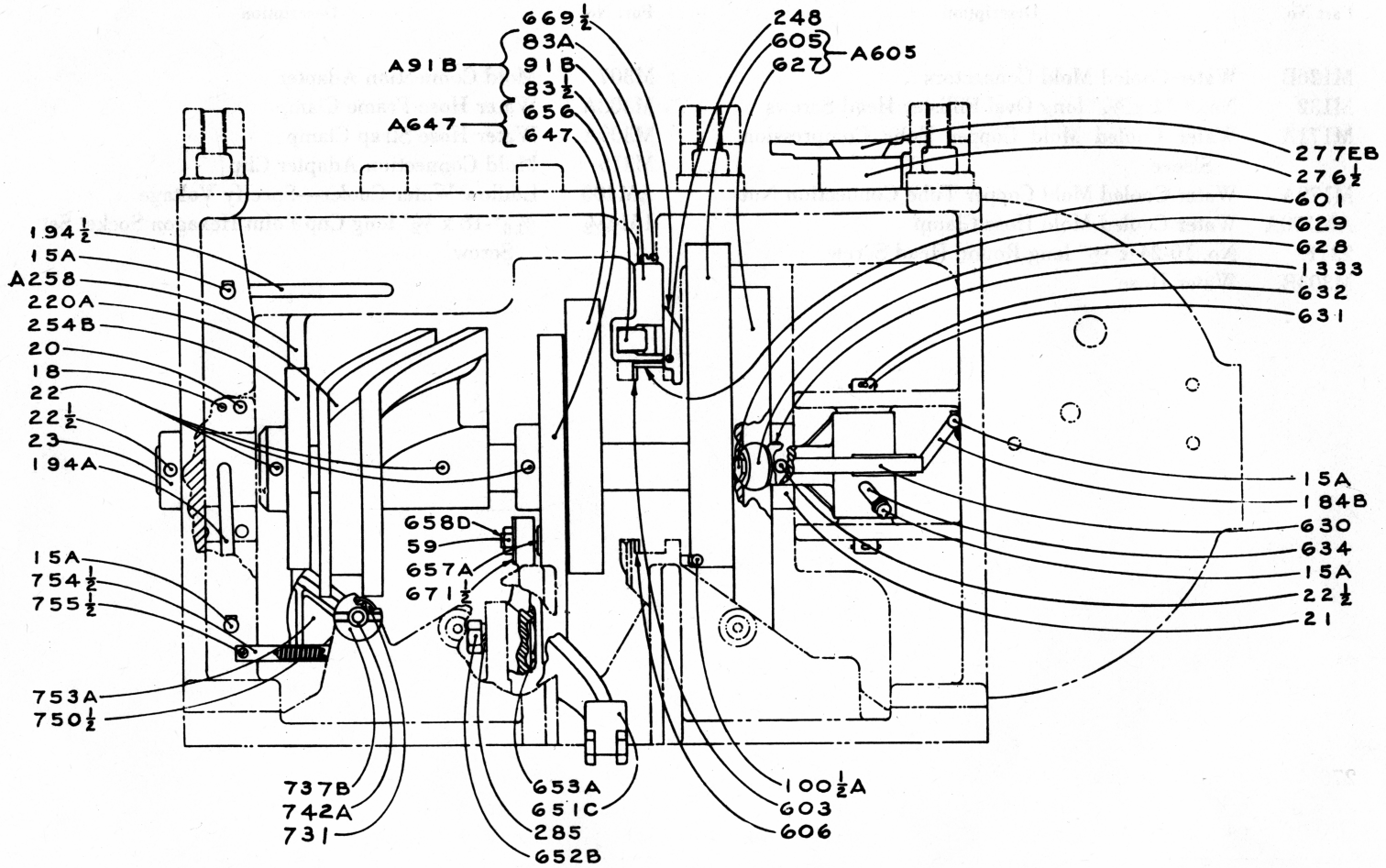

MAIN SHAFT PARTS

230. Then unscrew or
the other adjusting s
instance, if it is nece
unscrew the left-hand
the desired amount,
until it bears against
tighten the Check Nu
the Guard, A215A.

Plunger Height Adju

The plunger should
1/16 inch above the l
adjustment may be c
and Pin, 275. This wi
A piece of wire 1/16 i
"L" shape, so that
molten metal into th
After the wire has h
plunger should be p
plunger in this posit
Lever, 274A, should
Rod, 271A. If these h
Nut, 59, at the botton
the connecting rod u
is completed, tighten
Any variation from
result in hollow slugs

Plunger Spring Adj

At the time of in
should be rechecked.
the users plant with
position, adjust the t
a slight sign of overs
slug. Then release th
appears. Care shoul

Main Shaft, Cams and Safety Mechanism — Top View · Plate No. 13

Part No.	Description
15A	Oiler
18	¼"-20 x ⅞" long Flat Fillister Head Screw
20	½"-13 x 2" long Hexagon Socket Cap Screw
21	Main Shaft Collar (Right)
22	No. 6 Taper Pin—2¾" long
22½	No. 6 Taper Pin—2½" long
23	Main Shaft Collar (Left)
25	"G" Woodruff Key (Used on 220A, 254B, A605 & A647) (Not Illustrated)
59	½"-13 x 5/16" thick Standard Jam Nut
83A	Table Latch Yoke Pin
83½	Table Latch Safety Block (Use Pin 84½)
91B	Table Latch Yoke
A91B	Table Latch Yoke Assembly (Consists of Yoke [91B], Safety Block [83½] and Yoke Pin [83A]).
100½A	Oil Cup (Threaded)
184B	Main Shaft Bearing (Right) Oil Tube
194A	Main Shaft Bearing Oil Tube
194½	Main Shaft Bearing Oil Tube
220A	Crucible Cam (Use Key No. 25)
248	10-30 x ½" long Flat Fillister Head Screw
254B	Plunger Cam (Use Key No. 25)
A258	Plunger Cam Lever Assembly (Includes 95, 286, 287, 289 and 290)
276½	Panel Box Bracket Shim
277EB	Panel Box Bracket
285	⅝" Bolt Size x 1 1/32" OD x 3/32" thick Lock Washer
601	Main Slide Gib (Back) (Use Dowel No. 425 and Screws No. 602A)
603	Main Slide Gib (Back L.H.) (Use Dowel No. 425 and Screws No. 604A)
605	Main Slide Cam (Sold only as A605)
A605	Main Slide Cam Assembly (Includes 605 and 627)
606	Main Slide Gib (Front) (Use Dowel No. 425, Screws No. 583 & Adjusting Screws No. 604A)
627	Bottom Trim Cam (Sold only as A605)
628	Bottom Trim Cam Roll
629	Bottom Trim Cam Roll Stud
630	Bottom Trim Lever
631	Bottom Trim Lever Fulcrum
632	3/32" dia. x 1¼" long Cotter Pin
634	Bottom Trim Lever Oil Tube
A647	Ejector Cam and Delivery Cam Assembly (Includes 647 and 656)
647	Ejector Cam (sold only in assembly A647)
651C	Delivery Slide Lever
652B	Delivery Slide Lever Fulcrum Bolt
653A	Delivery Slide Lever Fulcrum Nut
656	Delivery Cam—(Sold in A647 Assembly only)
657A	Delivery Cam Roll
658D	Delivery Cam Roll Stud
669½	Stationary Delivery Slide Centralizer
671½	Delivery Cam Roll Washer
731	No. 2 x 1" long Taper Pin
737B	Safety Clutch (Lower) (See Plate No. 16)
742A	Safety Shaft
750½	Lower Safety Shaft Spring
753A	Safety Finger
754½	Spring Shield
755½	Spring Post
1333	¼"-20 x ½" long Hexagon Socket Set Screw

Plate No. 14

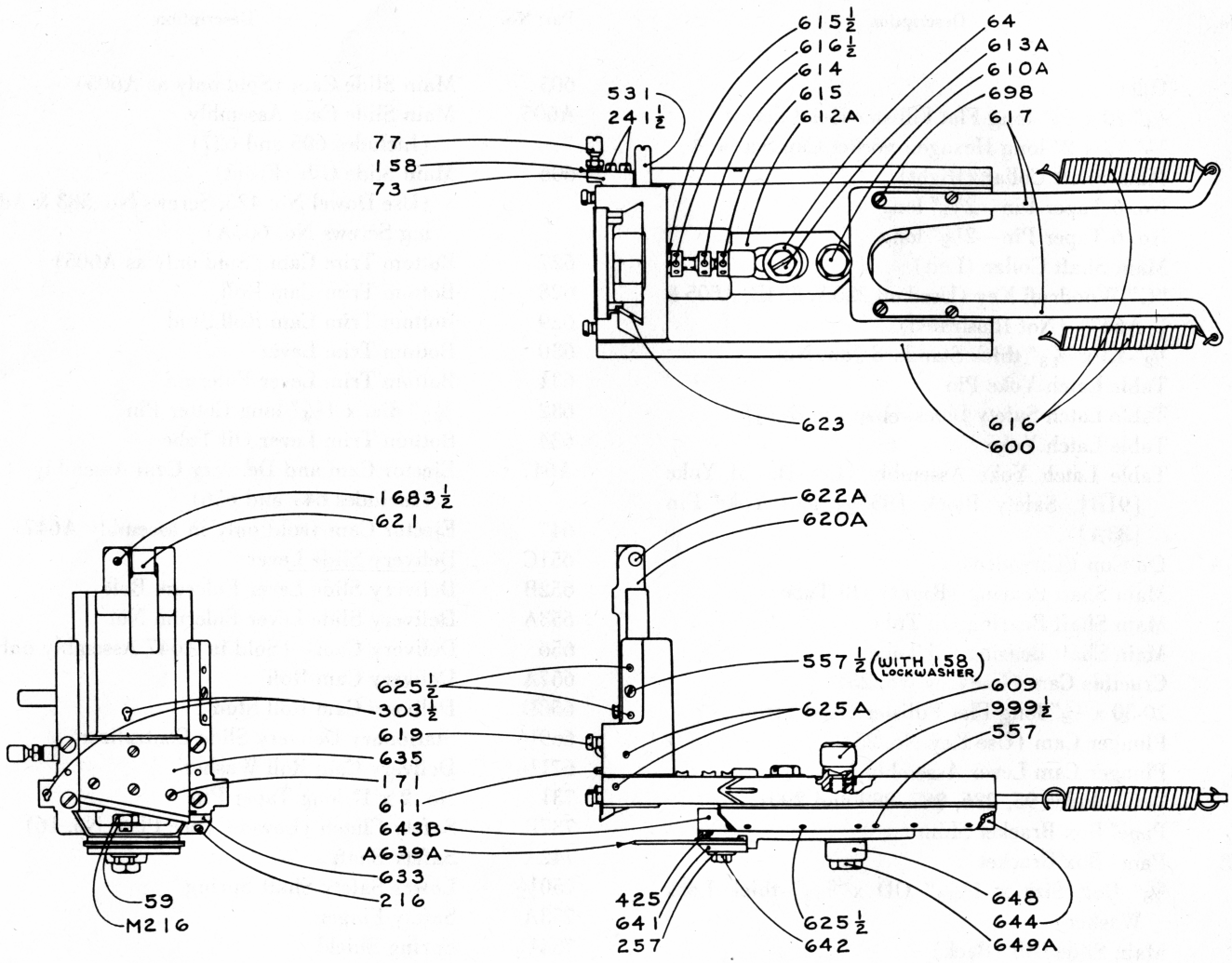

MAIN SLIDE

ing guide at the tim
guide itself is out of

The locking guide
ment of stick may be
adjustment, the Loc
loosened, which will
Adjusting Screws, 58
will be necessary to
the Screws, 576A, wh

If the locking guid
extent that the Lock
does not operate prop
the guide from the
Safety Connecting R
Bar, A590C. Loosen
Slide, 600, to the hig
slug halfway into th
blank slug and the lo
when using a 12-pt. r
6-pt. mold.

Mouthpiece to Mold

Revolve the belt p
ready to come into
paper between the m
machine by hand un
the under side of the
until the paper may b
will show whether the
against the mold.

There are two way
of adjustment with r
under side of the mo
wise in such a way th
only along one side,
section. Second, the

Main Slide · Plate No. 14

Part No.	Description
59	½"-13 Jam Nut (¾" across flats)
64	Washer for ½" Bolt
73	Table Latch Operating Stud Bracket
77	Table Latch Operating Stud
158	¼" Shakeproof Washer
171	¼"-20 x ⅝" long Flat Fillister Head Screw
216	8-36 x ¼" long Round Head Screw
M216	Washer for ½" Bolt
241½	¼"-20 x ⅞" long Hexagon Socket Cap Screw
257	Washer for ⅜" Bolt
303½	Main Slide Oiler
425	⅛" round x ½" long Dowel Pin
531	Locking Release Tripper Stud (Main Slide)
557	$\frac{3}{16}$" round x ¾" Hardened Dowel Pin
557½	Bottom Trim Slide Gib Screw
600	Main Slide
609	Main Slide Cam Roll
610A	Main Slide Cam Roll Stud
611	Main Slide Dowel
612A	Main Slide Adjusting Plate
613A	Main Slide Adjusting Plate Screw
614	Main Slide Adjusting Screw
615	Main Slide Adjusting Screw Check Nut
615½	⅜" Plain Lock Washer
616	Main Slide Spring
616½	Main Slide Adjusting Screw Check Nut (Upper)
617	Main Slide Spring Bar
619	Main Slide Mold Screw
620A	Bottom Trim Slide
621	Bottom Trim Slide Roll
622A	Bottom Trim Slide Roll Stud
623	Bottom Trim Slide Gib
625A	¼"-20 x ¾" long Self-Locking Oval Point Socket Set Screw
625½	¼"-20 x ⅝" long Self-Locking Oval Point Socket Set Screw
633	Ejector Slide Gib Guard
635	Bottom Trim Knife
A639A	Ejector Blade Assembled (6-point)
641	Ejector Clamp
642	⅜"-16 x ¾" long Hexagon Head Cap Screw
643B	Ejector Slide
644	Ejector Slide Gib
648	Ejector Cam Roll
649A	Ejector Cam Roll Stud
698	¼"-20 x ½" long Flat Fillister Head Screw
999½	¼"-20 x ⅜" long Half Dog Point Socket Set Screw
1683½	10-32 x ⅜" long Cup Point Headless Set Screw

Plate No. 15

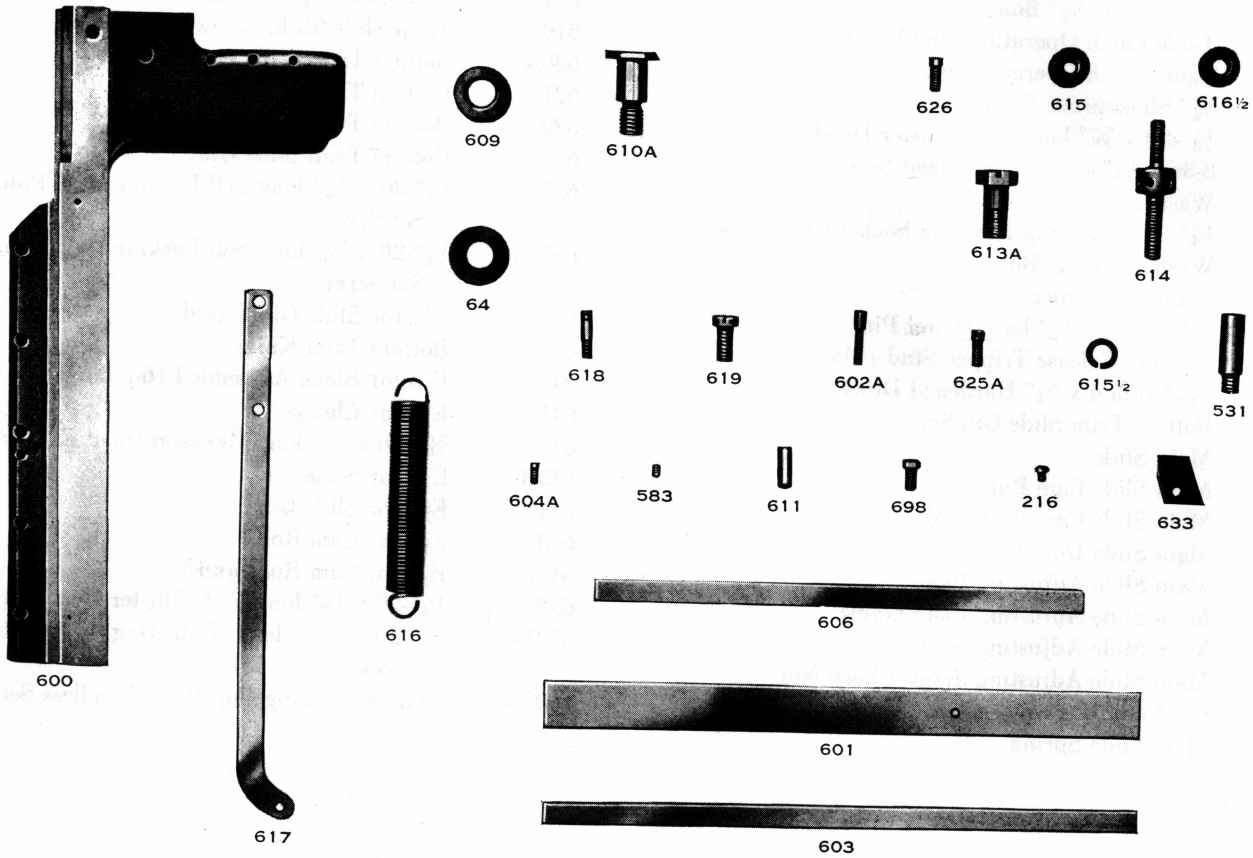

Main Slide Parts

BEFORE the ma
been tested and
has been in use
readjust some
closely and care

Safety Mechani

Before makir
table with the h
that the Safety
Cam Lever, A25
the plunger will

The Locking
designed that if
does not strike
place. The oper
become clogged
its operation.

The Locking
the stick of mat
before the stick
pawl should also
that might inter

The Safety O

Main Slide Parts · Plate No. 15

Part No.	Description
64	Style 201, ½″ Washer x 3/32″ thick
216	Style 7, No. 8-36 Round Head Screw x ¼″ long
531	Locking Release Tripper Stud
557½	Bottom Trim Slide Gib Spacer Screw —Use with Lock Washer 158
583	Style 4, No. 10-30 Headless Set Screw x ¼″ long
600	Main Slide (must be sold fitted with part 620-A)
	Main Slide Oiler—Use 303½
601	Main Slide Gib (back)
	Main Slide Gib Dowel Pin—Use 425
602A	Main Slide Gib Adjusting Screw
603	Main Slide Gib (back left hand)
	Main Slide Gib Dowel (back left hand)—Use 425
604A	Main Slide Gib Adjusting Screw (back left hand)
606	Main Slide Gib (front)
	Main Slide Gib Dowel Pin (front)—Use 425
	Main Slide Gib Adjusting Screw (front top)—Use 583
	Main Slide Gib Adjusting Screw (front)—Use 604A
609	Main Slide Cam Roll
610A	Main Slide Cam Roll Stud
	Main Slide Cam Roll Stud Set Screw—Use 626
611	Main Slide Dowel
613A	Main Slide Adjusting Plate Screw
	Main Slide Adjusting Plate Screw Washer—Use 64
614	Main Slide Adjusting Screw
615	Main Slide Adjusting Screw Check Nut
	Main Slide Adjusting Screw Lock Washer—Use 615½
615½	Style 202, ⅜″ Plain Lock Washer
616	Main Slide Spring (box of 6)
616½	Main Slide Adjusting Screw Check Nut (upper)
617	Main Slide Spring Bar
	Main Slide Spring Bar Screws—Use 698
618	Main Slide Spring Anchor
619	Mold Screw
625A	Bottom Trim Slide Adjusting Screw
625½	Ejector and Bottom Trim Slide Adjusting Screw
626	Style 5, ¼″-20 Square Head Set Screw x ½″ long
633	Ejector Slide Gib Guard
	Ejector Slide Gib Guard Screw—Use 216
698	Style 1, ¼″-20 Fillister Head Screw x ½″ long

Plate No. 16

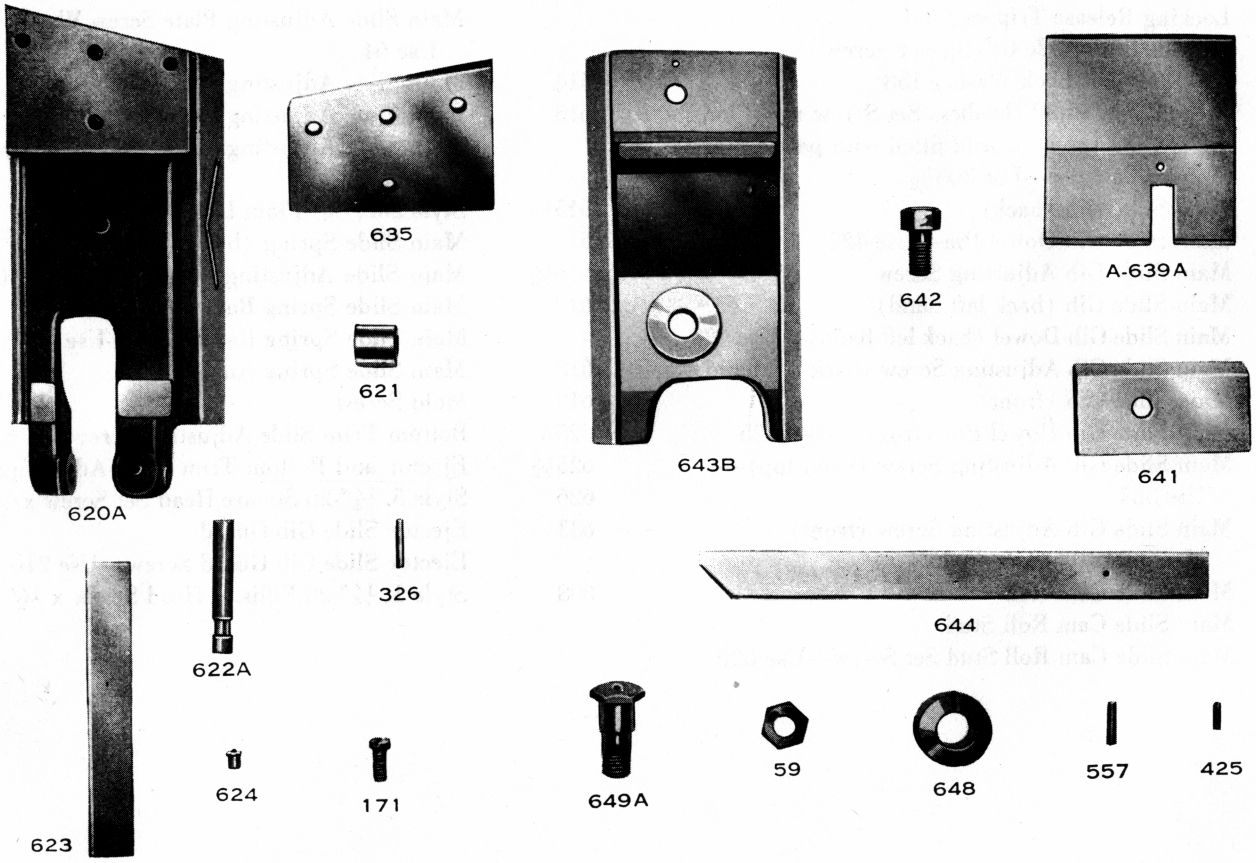

Ejector and Bottom Trim Slide Parts

be treated with gra
graphite should be p
piece has been asse
slugs to thoroughly
slugs.

Metal Level in the

Always try to ke
½ inch below the to
level is permitted
elements, these ele
their exposure to th
erable effect on the
be accurately regul
feeder.

Care of the Metal

To secure best re
the Ludlow, as in
contains improper
which is contamin
substance, will cau
this trouble will ap
In some cases these
throat and mouthp
satisfactory slug. A
gladly furnish an
will advise you of i
be necessary for p
obtained by casting

It is not intended
Ludlow or standar
crucible. Standard
antimony, and the
contains 4% tin,
Trouble may be e

Ejector and Bottom Trim Slide Parts · Plate No. 16

Part No.	Description
59	Style 102, ½"-13 Thick Hexagon Jam Nut x $1\frac{9}{64}$" thick
171	Style 1, ¼"-20 Fillister Head Screw x ⅝" long
M216	Hex. Nut
257	Ejector Clamp Washer
326	Style 56, $\frac{3}{16}$" Dowel Pin x ⅞" long
425	Style 56, ⅛" Dowel Pin x ½" long
557	Style 56, $\frac{3}{16}$" Dowel Pin x ¾" long
620A	Bottom Trim Slide (not sold separately—see part 600)
	Bottom Trim Slide Oiler—Use 303½
621	Bottom Trim Slide Roll
622A	Bottom Trim Slide Roll Stud
623	Bottom Trim Slide Gib
	Bottom Trim Slide Gib Screw—Use 557½
	Bottom Trim Slide Gib Screw Washer—Use 158
635	Bottom Trim Knife
	Bottom Trim Knife Screw—Use 171
A639A	Ejector Blade Assembled
	Ejector Blade Locating Pin—Use 425
641	Ejector Clamp
642	Ejector Clamp Screw
643B	Ejector Slide
644	Ejector Slide Gib
	Ejector Slide Gib Pin—Use 557
648	Ejector Cam Roll
649A	Ejector Cam Roll Stud
	Ejector Cam Roll Stud Nut—Use M216
1683½	Bottom Trim Slide Roll Stud Set Screw

Plate No. 17

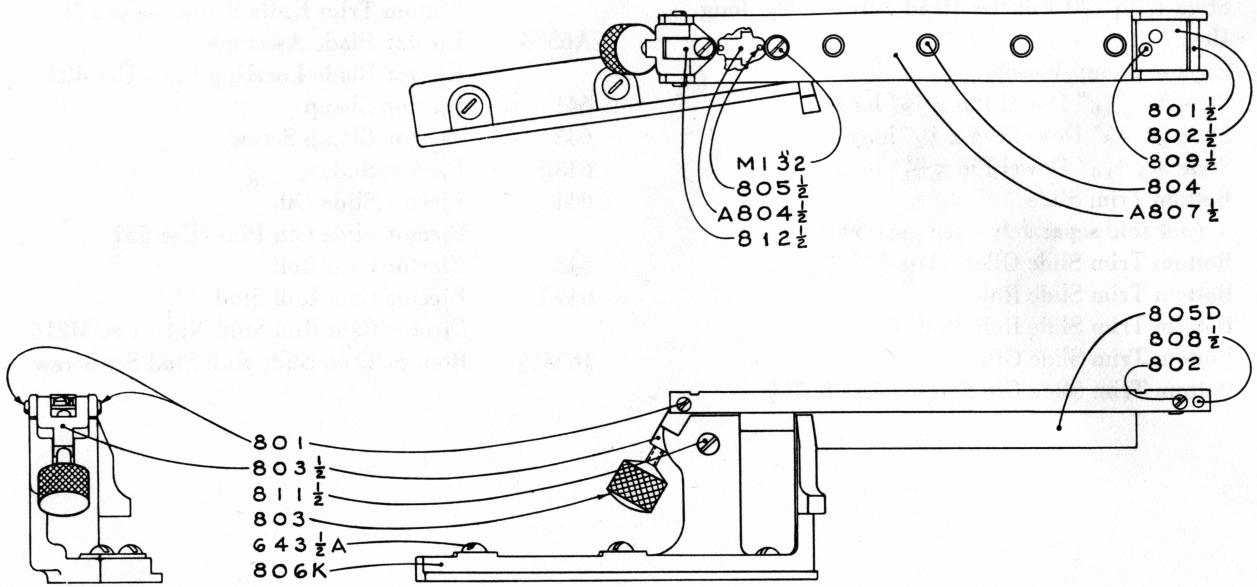

(A806K)

MOUTHPIECE WIPER AND BRACKET ASSEMBLY

Mouthpiece Wiper · Plate No. 17

Part No.	Description
M132	8-32 x 3/8" long Oval Fillister Head Screw
643½A	10-30 x 7/8" long Round Head Screw
801	Mouthpiece Wiper Latch Pivot Screw
801½	Mouthpiece Wiper Frame Spacer
802	Mouthpiece Wiper Hinge Block Screw
802½	Mouthpiece Wiper Tongue Hinge Block
803	Mouthpiece Wiper Latch Screw
803½	Mouthpiece Wiper Latch
804	Mouthpiece Wiper Tongue Pin
A804½	Mouthpiece Wiper Tongue Assembly
805D	Mouthpiece Wiper Felt (Sold as A805D—Box of 25)
805½	3/32" dia. x 9/32" Dowel Pin
806K	Mouthpiece Wiper Bracket
A807½	Mouthpiece Wiper Frame Assembly
808½	Mouthpiece Wiper Frame Spacer Pin
809½	Mouthpiece Wiper Tongue and Hinge Block Rivet
811½	Mouthpiece Wiper Hinge Pin
812½	Mouthpiece Wiper Hinge

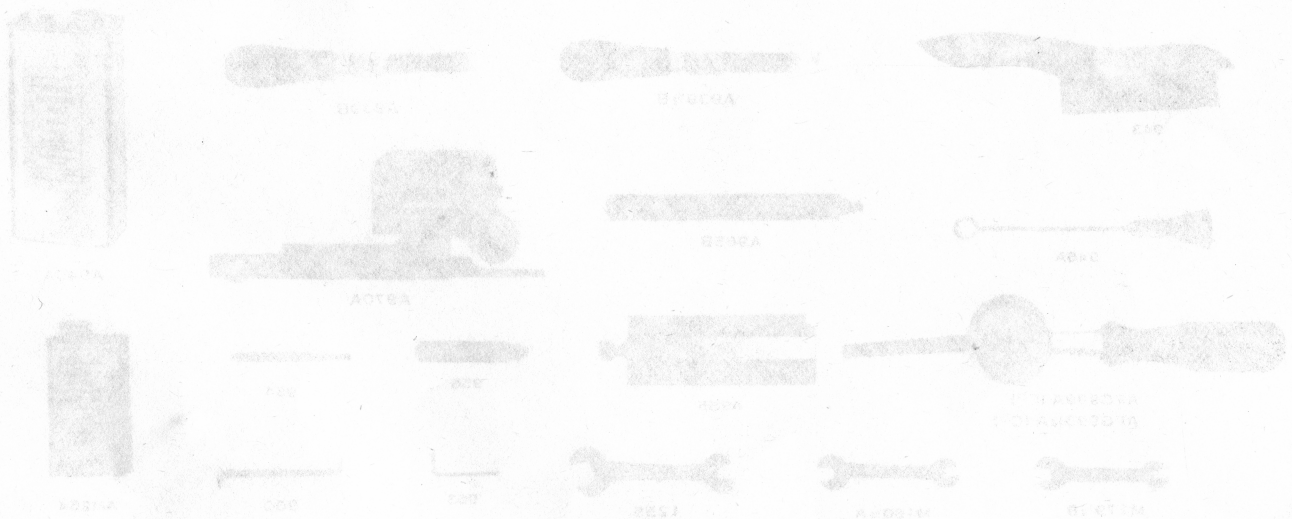

Plate No. 18

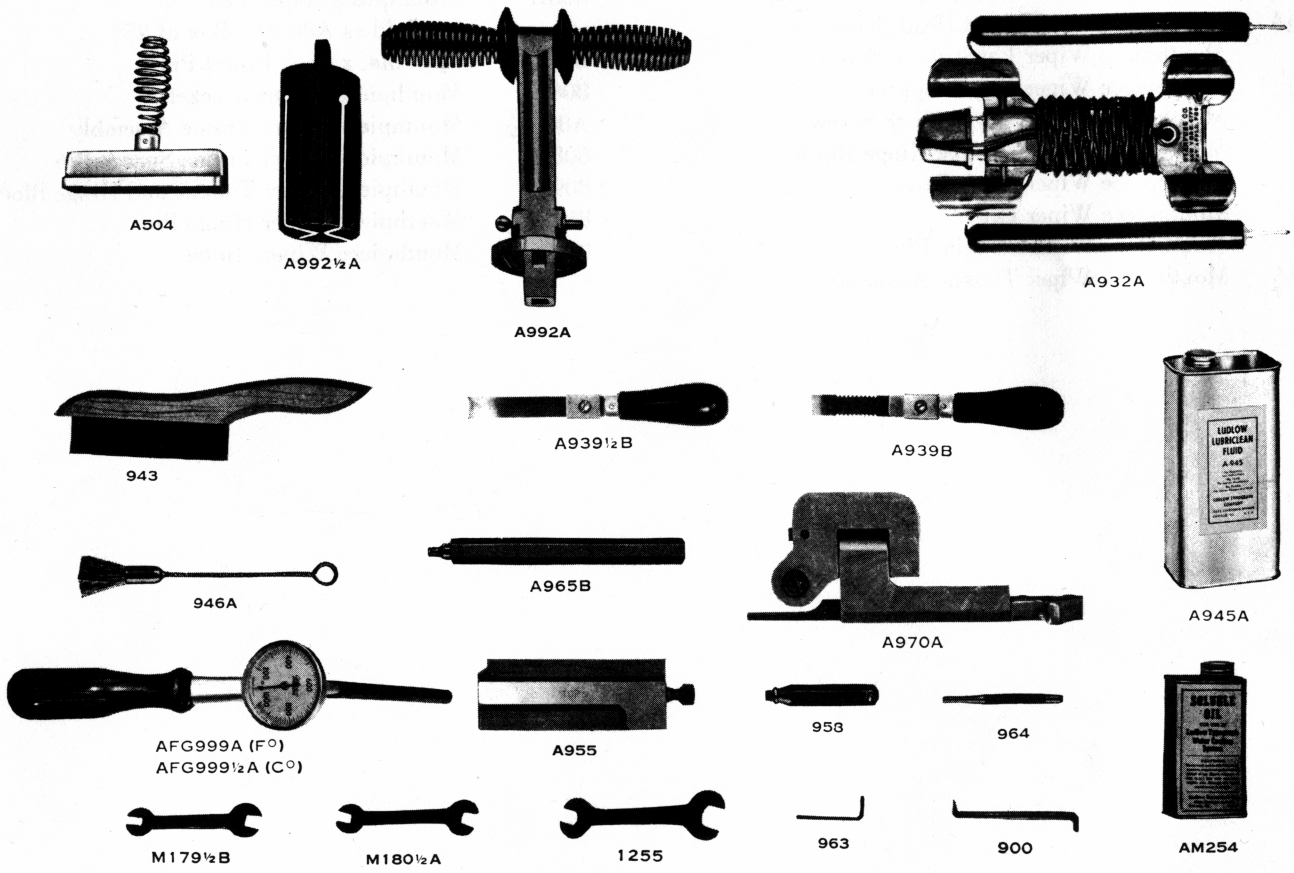

Accessories, Tools and Supplies

Ins

THE Model M Lu
and center of a s
ample room for t
working space at
cleaning, oiling a
of the machine, w
efficient operation

Electrical Conne

For electric-he
nected to the cont
A No. 10 gauge

Gas Connection

For gas-heate
should be connec
prevent pressure

Proper Seating

The Ludlow s
on the Ludlow M
as an accessory.
important that t
in the frame, wh
well as lock-up p

Accessories, Tools and Supplies · Plate No. 18

Part No.	Description
M179½B	Open End Wrench (⅜" and ½" openings)
M180½A	Open End Wrench (5/16" and 7/16" openings)
AM254	Soluble Oil (½ pint)
A504	Mouthpiece Opening Shield
900	Offset Screwdriver
A932A	Electric Testing Lamp Complete
A939B	Mouthpiece Slot Scraper
A939½B	Crucible Throat Scraper
943	Mouthpiece Wire Brush
A945A	Ludlow "Lubriclean" Fluid (1 quart)
	Ludlow "Lubriclean" Fluid (1 gallon)
A946A	"Lubriclean" Fluid Swab
A955	Blank Slug Block
958	Mold Removing Handle
963	Hexagon Wrench
964	Main Slide Adjusting Screw and Nut Wrench
A965B	Mouthpiece Screw Removing Tool Assembled
A970A	Matrix Stick Lock Assembled
A992A	Plunger Holder — Well Cleaning Tool Holder Assembled
A992½A	Well Cleaning Tool Assembled
AFG999A	Hot Metal Thermometer (Fahrenheit)
AFG999½A	Hot Metal Thermometer (Centigrade)
1255	End Wrench (9/16" and ¾" openings)

MODE